TRX200SX

HONDA

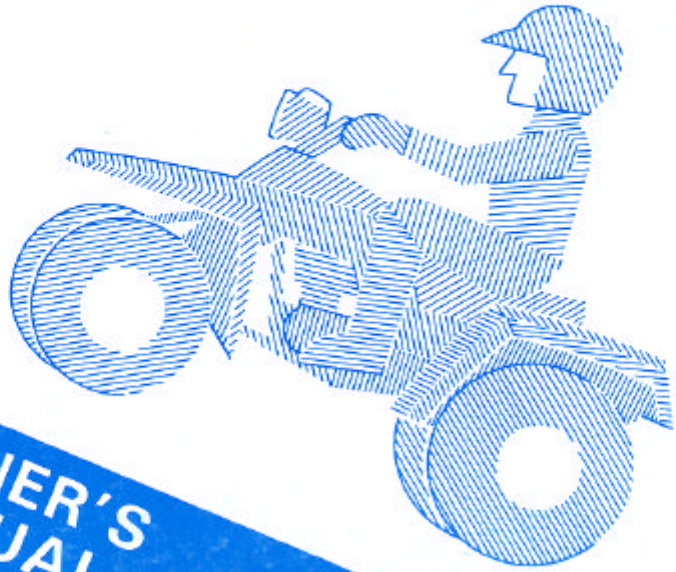

OWNER'S MANUAL

IMPORTANT NOTICE

- **OPERATOR ONLY. NO PASSENGERS.**

  This vehicle is designed and constructed as an operator-only model. The vehicle load limit and seating configuration do not safely permit the carrying of a passenger.

- **FOR OFF-ROAD USE ONLY.**

  This vehicle is designed and manufactured for off-road use only.

- **READ THIS OWNER'S MANUAL CAREFULLY**

  Pay special attention to statements preceded by the following words:

WARNING

Indicates a strong possibility of severe personal injury or loss of life if instructions are not followed.

CAUTION:

Indicates a possibility of personal injury or equipment damage if instructions are not followed.

NOTE: Gives helpful information.

This manual should be considered a permanent part of the ATC and should remain with the ATC when resold.

HONDA TRX 200SX
OWNER'S MANUAL

All information in this publication is based on the latest product information available at the time of approval for printing. HONDA MOTOR CO., LTD. reserves the right to make changes at any time without notice and without incurring any obligation.

No part of this publication may be reproduced without written permission.

© Honda Motor Co., Ltd. 1985

PREFACE

This booklet is your guide to the basic operation and proper maintenance of your new Honda TRX. Please take the time to read it carefully. Details necessary for riding the Honda TRX are given to acquaint the new owner with special riding techniques to be learned. When service is required, remember that your Honda dealer knows your vehicle best. If you have the required mechanical "know-how" and tools, your dealer can supply you with an official Honda Shop Manual to help you perform many maintenance and repair tasks.

Thank you for selecting a Honda. We wish you continued riding pleasure in the miles ahead.

CONTENTS

	Page
TRX SAFETY	1
DESCRIPTION	4
Parts Location	4
Serial Numbers	6
Parts Function	7
Fuel	17
Engine Oil	19
Tires	21
Battery	22
OPERATION	23
Pre-ride Inspection	23
Starting the Engine	24
Break-in	27
Riding	28
Parking	37
MAINTENANCE	38
Maintenance Schedule	38
Tool Kit	40
Engine Oil	41
Engine Oil Strainer Screen	42
Engine Oil Centrifuge Filter	43
Fuel Strainer Screen	44
Carburetor	45
High Altitude	46
Spark Plug	48
Air Cleaner	49
Valves	50
Clutch	52
Brakes	53
Throttle Cable	58
Drive Chain	59
Reverse Selector Lever	60
STORAGE GUIDE	61
TRANSPORTING	63
SPECIFICATIONS	65
WIRING DIAGRAM	66

WARNING

* ***TRX riding requires special efforts on your part to ensure your safety. Know these requirements before you ride.***
* ***Avoid riding on paved surfaces as handling can be seriously affected. If it is necessary, ride at reduced speeds and avoid sudden turns.***

SAFE RIDING RULES

* Always make a pre-ride inspection (page 23) before you ride the TRX. You may prevent on accident or equipment damage.
* Always obey local off-road riding laws and regulations.
* Obtain permission to ride on private property. Avoid posted areas and obey "no trespassing" signs.
* Do not ride fast on unfamiliar terrain or when visibility is limited. Before riding in a new area, check the terrain thoroughly. Never ride headlong past your limit of visibility. It is sometimes impossible to see obstructions, holes and depressions. Always exercise caution.
* Your ability to operate the TRX safely is largely dependent upon your proper judgement.
* Do not use the flag pole bracket as a trailer hitch.
* Maintain a safe distance between your TRX and other off-road vehicles.
* Do not ride on or near railroad tracks as it is difficult to hear an approaching train.
* When you select reverse gear, make sure there are no obstacles or people behind you. When it is safe to proceed, ride slowly.
* Alcohol, drugs and TRX's don't mix. Even the smallest amount of alcohol can impair your ability to operate your TRX's safely. Likewise, drugs, even if prescribed by a physician, can be dangerous while operating a TRX. Consult your doctor to be sure it is safe to operate a motor vehicle after taking medication.

PROTECTIVE APPAREL

* Always wear a helmet. You should also wear a face shield or goggles, boots, gloves and protective clothing.
* The exhaust system becomes very hot during operation and it remains hot after operation. Never touch any part of the hot exhaust system. Wear clothing that fully covers your legs.

MODIFICATIONS

* Modification of the TRX, or removal of original equipment, may render the vehicle unsafe or illegal.
* Spark arresters and mufflers are required in most areas. Don't modify your exhaust system. Remember that excessive noise bothers everyone and creates a bad image for off-road vehicles.

LOADING AND ACCESSORIES

WARNING

* ***To prevent an accident, use extreme care when riding with accessories and cargo. Addition of accessories and cargo can reduce the TRX's stability, performance, and safe operating speed. Slow down (10 mph or less) when loaded with cargo or pulling a trailer.***

The combined weight of the rider, cargo, and all accessories must not exceed **170 kg (375 lbs)** which is the vehicle capacity load.
The following loading and towing capacity data is valid only when the riding terrain is level and flat. For different riding terrains, you must exercise your own judgement to load and ride the TRX safely because carrying cargo car reduce the ability of the TRX to operate on slopes or other rough terrain. rough terrain.
Never exceed the loading capacities given here.

1. Load cargo on the rear carrier as far forward as possible. Do not allow cargo to extend beyond the end of rear carrier.

Front carrier	**20 kg (45 lbs)**
Rear carrier	**30 kg (66 lbs)**

2. When towing a trailer, care should be taken to maintain balance and stability. Place cargo in the trailer so that it will not cause the front wheels to lift off the ground during travel.

Tow weight (Trailer plus cargo weight)	**225kg(495lds)**
Tongue weight (Weight on hitch point)	**14 ± 7kg(30 ± 15lbs)**

3. When towing a trailer and carrying cargo, the combined tongue weight and rear cargo weight should not exceed 45 kg (100 lbs).
4. Do not obstruct the headlight beam with cargo.
5. Do not ride with a passenger on the front or rear carrier.

   This TRX is not designed to carry a passenger.
6. Do not place any baggage on any where after than rear carrier and front carrier, or it may badly affect the operating stability and the engine.

PARTS LOCATION

(1) Fuel tank cap
(2) Throttle lever
(3) Front brake lever
(4) Neutral indicator lamp
(5) Reverse indicator lamp
(6) Reverse selector knob
(7) Rear brake/parking brake lever

(8) Choke knob
(9) Headlight switch
(10) Engine stop switch
(11) Headlight dimmer switch
(12) Starter button
(13) Recoil starter
(14) Fuel valve
(15) Gearshift pedal
(16) Ignition switch
(17) Helmet holder
(18) Steering lock

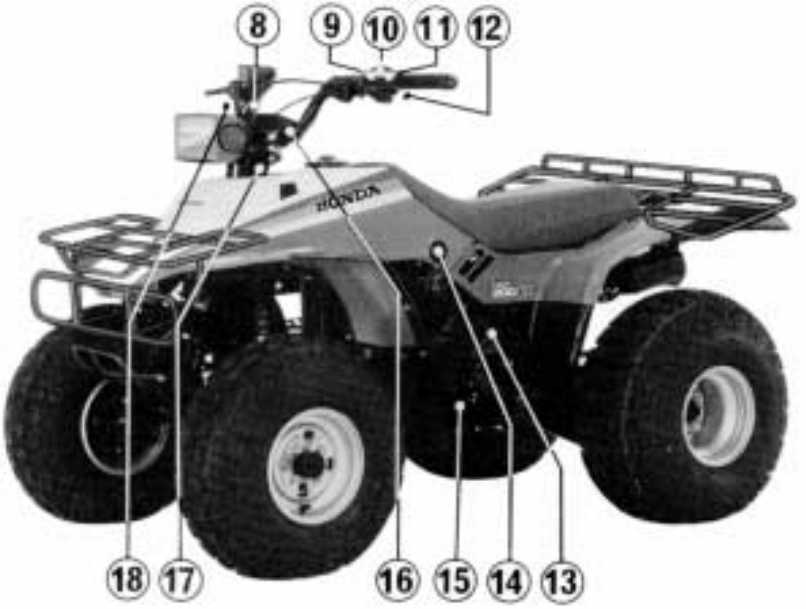

SERIAL NUMBERS

The frame and engine serial numbers are required by your dealer when ordering replacement parts. Record the numbers here for your reference.

FRAME NO. _____

ENGINE NO. _____

The frame serial number (1) is stamped on the left side of the frame. The engine serial number (2) is stamped on the crankcase behind the left footpeg.

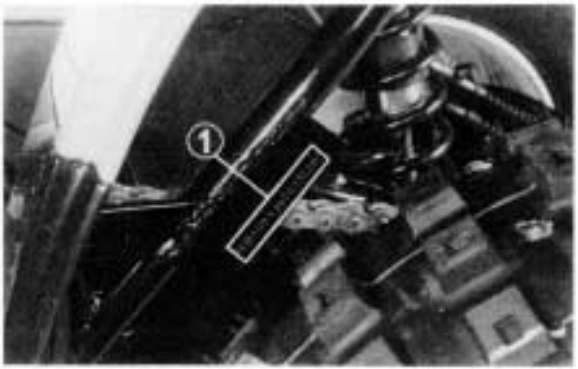

(1) Frame serial number

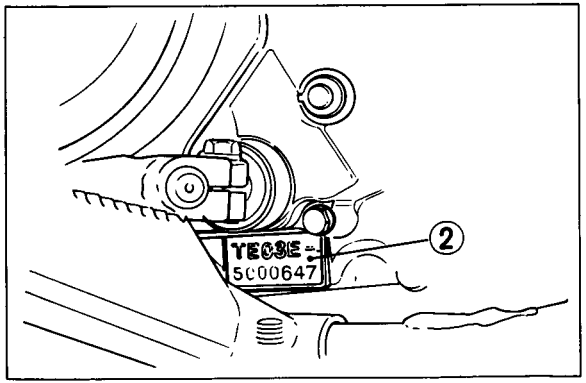

(2) Engine serial number

PARTS FUNCTION

Ignition Switch

The ignition switch (1) is on the handlebar upper holder.

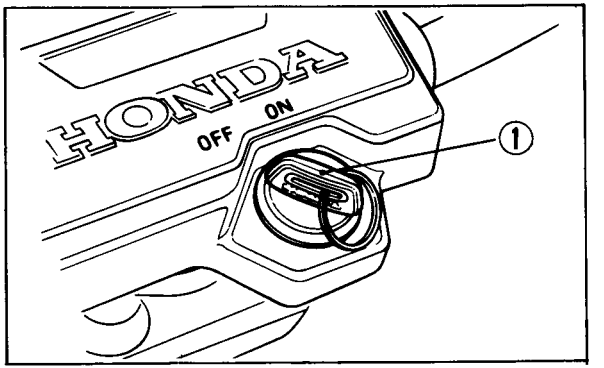

Key Position	Function	Key Removal
OFF	Engine and headlight cannot be operated.	The key can be removed.
ON	Headlight can be turned on. With the engine stop switch at RUN and transmission in neutral, the engine can be started.	The key cannot be removed.

Reverse Indicator Lamp

The TRX 200SX is equipped with a reverse indicator lamp (1) to show when the transmission is in reverse. The reverse indicator lamp is on the handlebar upper holder. The lamp lights with the ignition switch ON when the transmission is in reverse.

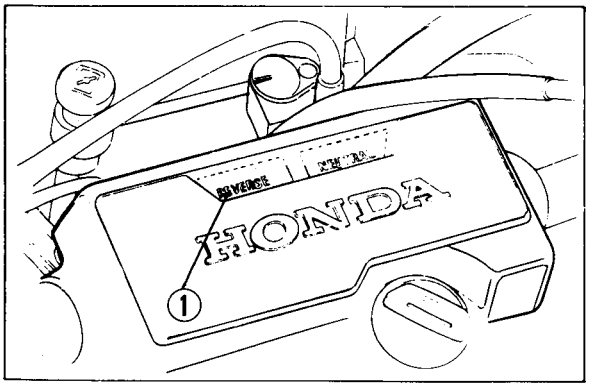

(1) Reverse indicator lamp

Engine Stop Switch

The three position engine stop switch (1) is next to the left handlebar grip. When the switch is in the RUN position, the engine will operate. When the switch is in either OFF position, the engine will not operate. This switch is intended primarily as a safety or emergency switch and should normally remain in the RUN position.

NOTE:

* If your TRX is stopped with the ignition switch ON and the engine stop switch OFF, the headlight may still be on, resulting in battery discharge.

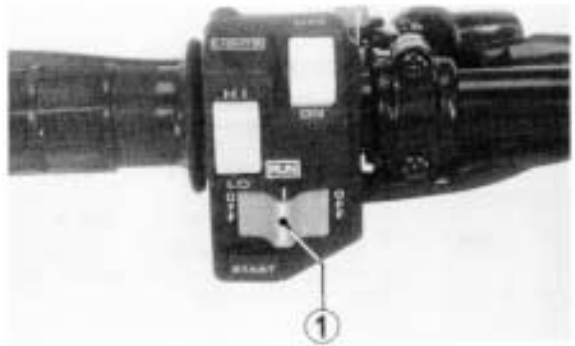

(1) Engine stop switch

Starter Button

The starter button (1) is below the engine stop switch. When the starter button is pressed and the transmission is in neutral, the starter motor will crank the engine.

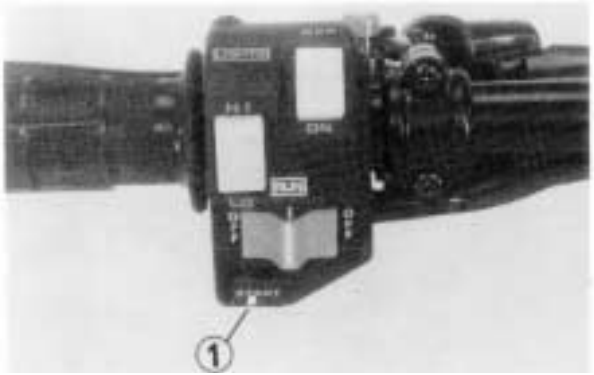

(1) Starter button

Headlight Switch/Headlight Dimmer Switch

The headlight (1) and headlight dimmer (2) switches are above the engine stop switch.
Turn the headlight ON with the headlight switch after the engine has been started, and select high beam (HI) or low beam (LO) with the headlight dimmer switch.

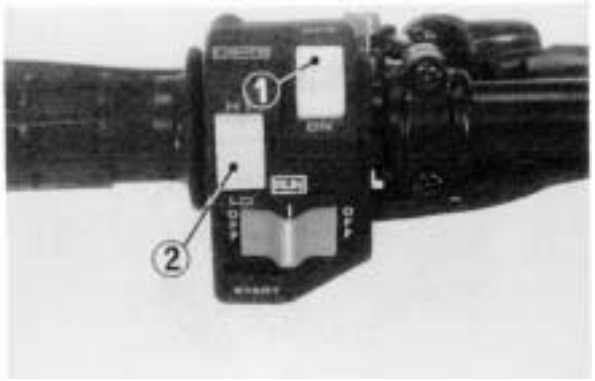

(1) Headlight switch (2) Headlight dimmer switch

Owner's Manual Compartment

This owner's manual should be stored in the lower compartment in the tool box.
When washing your TRX or riding through water, be careful not to flood this area with water.

NOTE:

* The air pressure gauge should be stored in this owner's manual compartment.

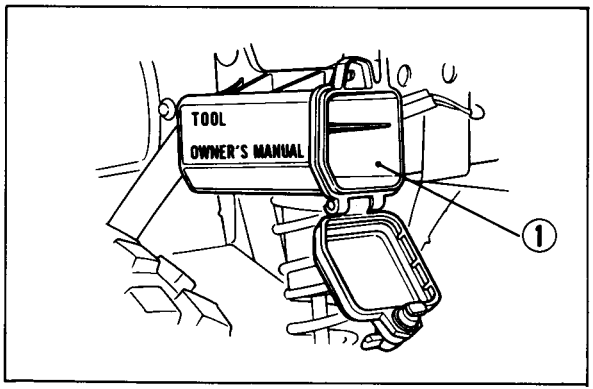

(1) Owner's manual compartment

Storage Compartment

The storage compartment (1) is at the rear of rear fender.

WARNING

* ***Do not carry more than 1.35 kg (3 lbs) of cargo in the storage compartment.***

(1) Storage compartment

Helmet Holder

The helmet holder (1) is under the left headlight stay. Insert the ignition key (2), turn it counterclockwise to unlock and hang your helmet on the hook at the hinge. Turn the key all the way clockwise and remove the key.

WARNING

* ***The helmet holder is designed for helmet security while parking. Do not operate the TRX with a helmet attached to the holder.***

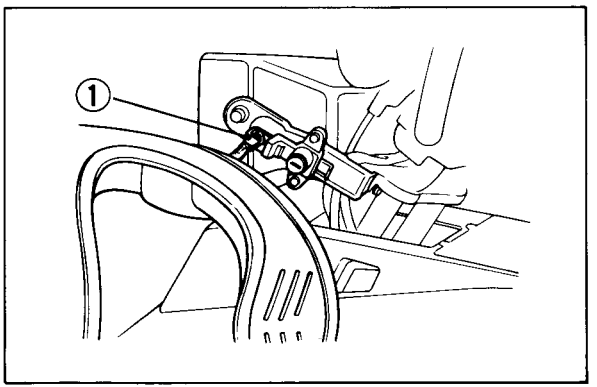

(1) Helmet holder

Steering Lock

The steering lock (1) is front the handle cover. Open the steering locks and insert the ignition key into the steering lock and turn the handlebar all the way to the right. Turn the key clockwise.

WARNING

* ***Do not engage the steering lock while riding the TRX.***

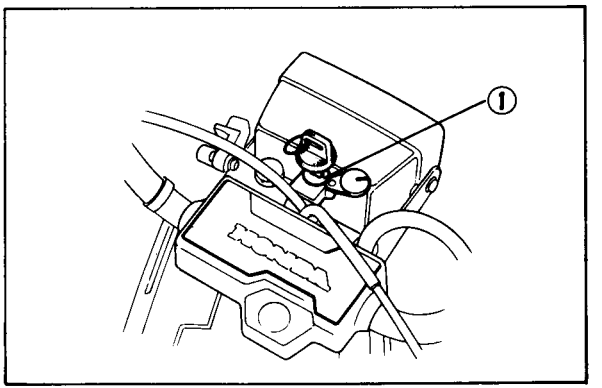

(1) Steering lock

Throttle Lever

The throttle lever (1) is next to the right handlebar grip and is operated by the rider's thumb. Pressing the lever forward opens the throttle. When the lever is released, spring tension closes the throttle automatically.

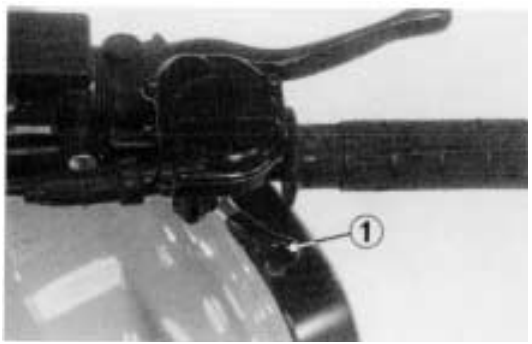

(1) Throttle lever

Rear Brake/Parking Brake Lever

The front brake lever is at the right handlebar grip. The left brake lever (1) and the brake pedal both operate the rear brake. Either one can be used to stop the TRX. The left brake lever has the added feature of a lock (2) which allows the lever to be used as a parking brake.

Pull the left brake lever back and lock it with the lock. Always apply the parking brake when parking the TRX and when starting the engine.

The parking brake is unlocked by squeezing the left brake lever.

NOTE:

* Use of the parking brake in freezing weather may cause the brakes to freeze in the locked position.

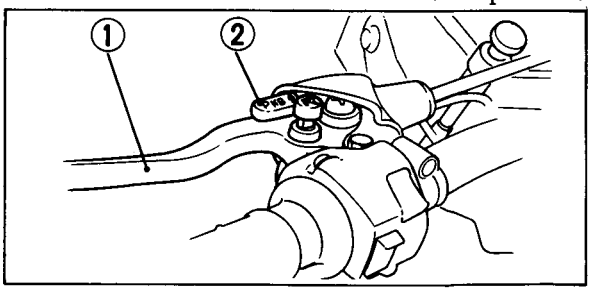

(1) Rear brake/Parking brake lever (2) Lock

Reverse Selector Knob

The reverse selector knob (1) is on the rear brake/parking brake lever.
When shifting the transmission into reverse, push the reverse selector knob in and squeeze the rear brake/parking brake lever.
The transmission will be shifted into reverse by depressing the gearshift pedal.

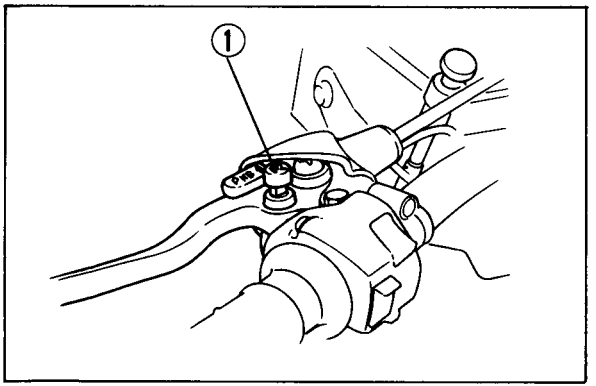

(1) Reverse selector knob

Neutral Indicator/Neutral Indicator Lamp

The TRX 200SX is equipped with two indicators to show when the transmission is in neutral. This feature enables the rider to verify that the transmission is in neutral before starting the engine.
The neutral indicator lamp (1) is on the handlebar upper holder. When the ignition switch is turned to ON, the lamp lights if the transmission is in neutral. If the lamp does not light, shift the transmission into neutral, whereupon the lamp will light.
The neutral indicator (2) is on the left crankcase cover, just behind the recoil starter. The indicator rotates as the gears are changed. When the indicator aligns with the N mark on the crankcase, the transmission is in neutral.

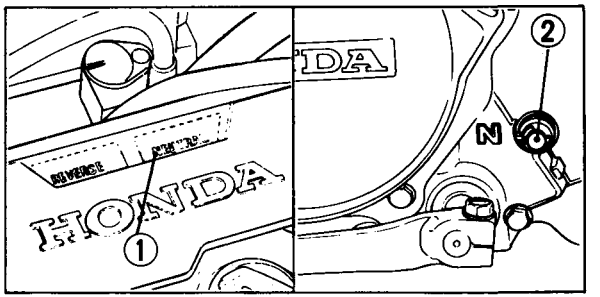

(1) Neutral indicator lamp (2) Neutral indicator

Decompressor

The Honda TRX has a decompressor lever (1), located on the left side of the cylinder head cover, to aid starting when using the recoil starter. Before starting the engine, raise the lever to the DECOMP position (A). The lever moves down automatically when the recoil starter is pulled.

NOTE:

* **If the lever does not stay in the DECOMP position, there is no cylinder compression to release. Just pull the recoil starter to start the engine.**

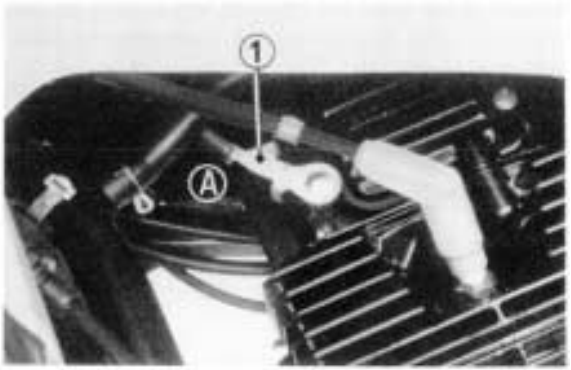

(1) Decompressor lever **(A) DECOMP position**

Choke Knob

The choke knob (1) is on the handlebar upper holder. Pulling the choke knob up will close the choke, and the carburetor will deliver a rich fuel mixture for starting the engine when cold. Lower the lever to open the choke as the engine attains normal operating temperature.

To restart a warm engine, it is not necessary to use the choke.

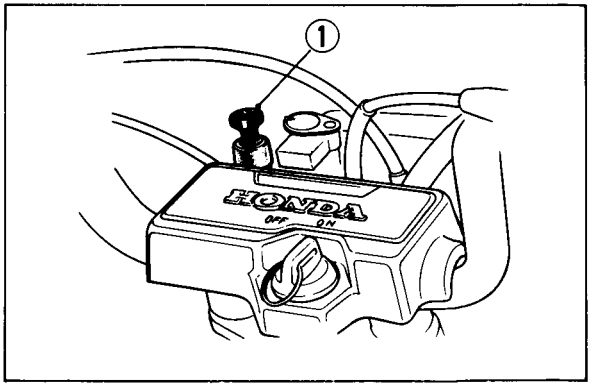

(1) Choke knob

Gearshift Pedal

The gearshift pedal (1) is near the left footpeg. One full stroke of the gearshift pedal will shift the transmission. The pedal automatically returns to the horizontal position when released. Each stroke of the pedal engages the next gear in sequence.
Raise the pedal to upshift to a higher gear and depress the pedal to downshift.
When the reverse selector knob is pushed in and the rear brake/parking brake lever is squeezed, the transmission can only be shifted from neutral to reverse gear by depressing the gearshift pedal.

CAUTION:

* *Bring the TRX to a complete stop before shifting the transmission into reverse. If the transmission is shifted into reverse when the vehicle is moving, damage to the transmission will result.*

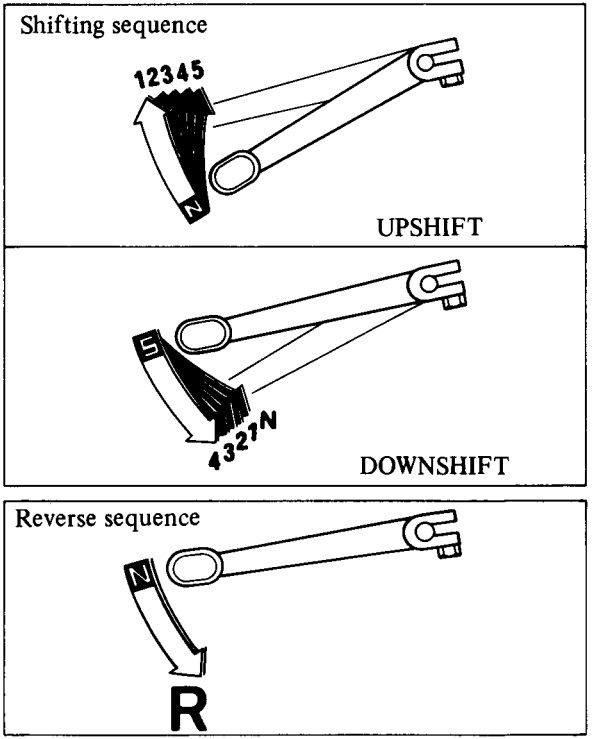

Fuse Replacement

The main fuse holder (2) is located in the terminal box (1) on the left side of the frame. The main fuse is 15A.

When frequent fuse failure occurs, it usually indicates a short circuit or an overload in the electrical system. See your authorized Honda dealer for repair.

WARNING

* ***Never use a fuse with a different rating from that specified. Serious damage to the electrical system or a fire may result, causing a dangerous loss of lights or engine power at night.***

CAUTION:

* *Turn the ignition switch OFF before checking or replacing the fuse to prevent accidental short-circuiting.*

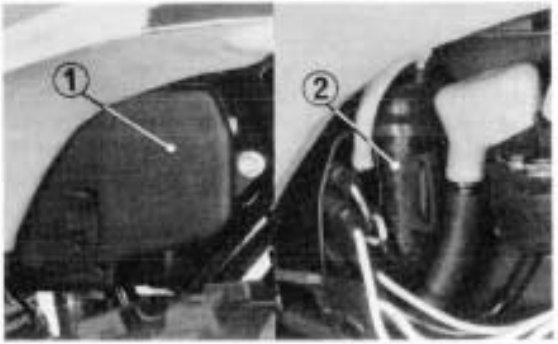

(1) Terminal box (2) Main fuse holder

FUEL

Fuel Valve

The three way fuel valve (1) is located on the left side under the seat.

OFF

With the fuel valve in the OFF position, fuel cannot flow from the tank to the carburetor. Turn the valve off whenever the TRX is not in use.

ON

With the fuel valve in the ON position, fuel will flow from the main fuel supply to the carburetor.

RES

With the fuel valve in the RES position, fuel will flow from the reserve fuel supply to the carburetor. Use the reserve fuel only when the main supply is gone. Refill the tank as soon as possible after switching to RES. The reserve fuel supply is 2.0 ℓ (0.52 US gal).

NOTE:

* Do not operate the TRX with the fuel valve in the RES position after refueling. You may run out of fuel with no reserve.

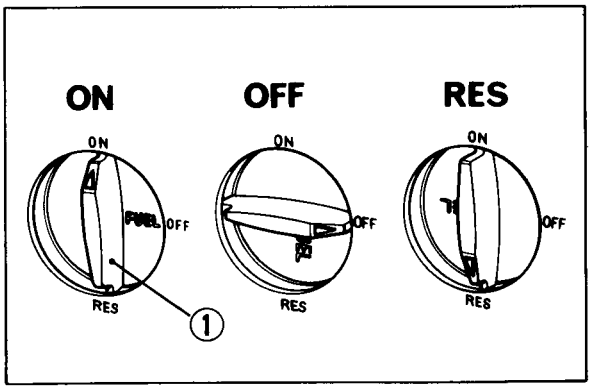

(1) Fuel valve

Fuel Tank

Fuel tank capacity is 8.0 ℓ (2.1 US gal) including 2.0 ℓ (0.52 US gal) in the reserve supply. Remove the fuel tank cap (1) by twisting it counterclockwise. Automotive gasoline with a pump octane number ($\frac{R+M}{2}$) of 86 or higher, or research octane number of 91 or higher may be used.

FOR NEW SOUTH WALES ONLY:
Use unleaded fuel with 2 research octan number of 91 or higher.
If knocking or pinging occurs try a different brand of gasoline or a higher octane grade.

After refueling, be sure to tighten the tank cap firmly by turning it clockwise until the arrow on the cap faces forward.
The fuel tank cap (1) has a lever (2) with ON and OFF positions to open or close the tank vent. The lever should be turned to ON to allow fuel to flow when running the engine.
Turning the lever to OFF will prevent fuel from flowing out the vent hole when transporting the TRX.

WARNING

* ***Gasoline is extremely flammable and is explosive under certain conditions. Refuel in a well-ventilated area with the engine stopped. Do not smoke or allow open flames or sparks in the area where the vehicle is refueled or where gasoline is stored.***
* ***Do not overfill the tank (there should be no fuel in the filler neck). After refueling, make sure the tank cap is closed securely.***
* ***Avoid repeated or prolonged contact with skin or breathing of vapor. KEEP OUT OF REACH OF CHILDREN.***

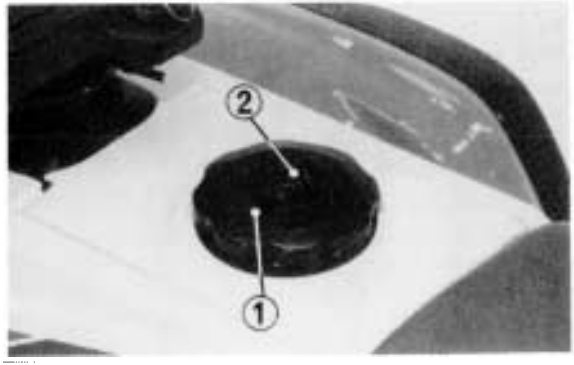

(1) Fuel tank cap (2) Cap lever

ENGINE OIL

Engine Oil Level Check

Check engine oil level each day before operating the TRX.

The oil filler cap (1) is on the right crankcase cover and contains a dipstick for measuring the oil level. The oil level must be maintained between the upper (2) and lower (3) level marks on the dipstick.

To check the oil level:

1. With the TRX on level ground, remove the oil filler cap/dipstick and wipe it clean.
2. Reinsert the dipstick without screwing it in. Remove the oil filler cap/dipstick again and check the oil level.
3. If required add the specified oil up to the upper level mark. Do not overfill.
4. Replace the filler cap/dipstick.

WARNING

* *Running the engine with insufficient oil can cause serious engine damage.*

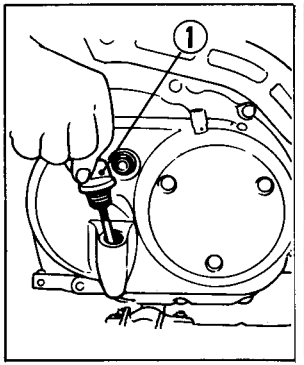

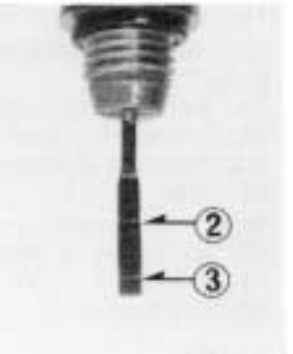

(1) Oil filler cap/dipstick
(2) Upper level mark
(3) Lower level mark

Engine Oil Recommendation

USE HONDA 4-STROKE OIL OR AN EQUIVALENT.

Use only high detergent, premium quality motor oil certified to meet or exceed US automobile manufacturer's requirements for Service Classification SE or SF.

Motor oils intended for Service SE or SF will show this designation on the container. The use of special oil additives is unnecessary and will only increase operating expenses.

CAUTION:

* *Engine oil is a major factor affecting the performance and service life of the engine. Non-detergent, vegetable, or castor based racing oils, are not recommended.*
* *Do not use oils with graphite or molybdenum additives: they will adversely affect clutch operation.*

Recommended Oil Viscosity:
SAE 10W-40

Other viscosities shown in the chart below may be used when the average temperature in your riding area is within the indicated range.

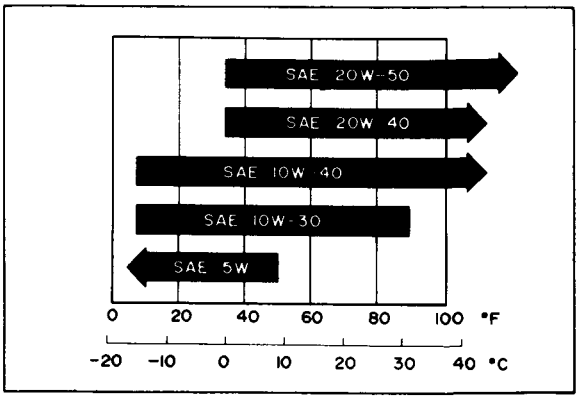

TIRES

The tires are designed specifically for vigorous off-road use, they are not immune to punctures. Always select your riding area with care.

WARNING

* ***The TRX is not designed to be driven on paved surfaces. Handling and control will be severely affected.***

Check tire pressure frequently with the air pressure gauge supplied with this TRX.

Tires should be inflated to the recommended pressure.

NOTE:

* Tire pressure should be checked when the tires are "cold," before you ride.

If no air pressure gauge is available to accurately measure air pressure, this value can be estimated by measuring the circumference of the tires with a measuring tape. When inflated to the recommended pressure, the maximum tire circumference measured over the tread ribs will be approximately the standard tire circumference. The relationship between tire pressure and actual circumference varies slightly with factors of wear and stretching that occur through use.

	Front	Rear
TIRE SIZE	20x7.00–8	22x11.00–8
TIRE BRAND	OHTSU AT101	OHTSU H-TRACK PROVECTOR 301
Recommended pressure	3.0 psi (20.6 kPa, 0.21 kg/cm²)	2.5 psi (16.7 kPa, 0.17 kg/cm²)
Standard tire circumference	1594 mm (62.8 in)	1756 mm (69.1 in)
Max. pressure	3.4 psi (24 kPa, 0.24 kg/cm²)	2.9 psi (20 kPa, 0.20 kg/cm²)
Min. pressure	2.6 psi (18 kPa, 0.18 kg/cm²)	2.1 psi (14 kPa, 0.14 kg/cm²)

WARNING

* *Maintain proper tire air pressure. Improperly inflated tires may adversely affect maneuverability and may cause loss of control.*

If you have a flat tire, use the plug method to make temporary repairs. The plug method is the same as that for conventional tubeless tires. A plug type repair kit, which is available at most auto part stores or service stations, provides a plug, an installation tool, tire cement, and an instruction sheet. Follow the instructions provided in the repair kit to make a temporary repair until the tire can be permanently repaired by the cold patch method. Any tire which cannot be repaired by the plug method should be replaced.

Whenever the TRX is to be operated far from service facilities or available transportation, we recommend that the rider carry a tire pump and a suitable repair kit with the TRX.

BATTERY

It is not necessary to check battery electrolyte level or add distilled water as the battery is a sealed type. If any loss of electrolyte is experienced or if your battery seems to be weak, causing slow starting or other electrical troubles, see your authorized Honda dealer.

CAUTION:

* *Do not attempt to remove the caps from the cells.*
* *When the TRX 200SX is to be stored for an extended period of time, remove the battery from the vehicle and charge it fully. Then store it in a cool, dry place. If the battery is to be left on the vehicle, disconnect the negative cable from the battery terminal.*

WARNING

* ***Keep away from open flames or sparks when handling a battery.***

PRE-RIDE INSPECTION

WARNING

* ***Failure to conduct the listed maintenance checks and adjustments may lead to equipment failure that could cause an accident.***

Inspect your TRX every day before you ride it. The items listed here will only take a few minutes to check and in the long run can save time, expense, and possibly your life.

1. Engine oil level – if required add engine oil (page 19). Check for leaks.
2. Fuel level – fill the fuel tank when necessary (page 19). Check for leaks.
3. Brakes – check operation; make sure there is no brake fluid leakage. If necessary adjust free play (pages 53–57).
4. Tires – check condition and pressure (pages 21–22).
5. Drive chain – check condition and slack (page 59). If necessary adjust and lubricate.
6. Throttle – check for smooth opening and closing in all steering positions (page 58).
7. Headlight switch – check for proper function (page 9).
8. Engine stop switch – check for proper function (page 8).
9. Nuts, Bolts, Fasteners – check the wheels to see that the axle nuts are tightened and secured by cotter pins. Check the security of all other nuts, bolts and fasteners.
10. Steering – check that the wheels turn properly as you steer the handlebars.

Correct any discrepancy before you ride. Contact your authorized Honda dealer for assistance if you cannot correct the problem.

STARTING THE ENGINE

WARNING

* *Never run the engine in a closed area. The exhaust contains poisonous carbon monoxide gas.*
* *Do not try to start the engine with the transmission in gear. You may injure yourself or damage the vehicle.*
* *Be sure to release the steering lock before attempting to start the engine.*

Preparation

1. Select a level surface and lock the parking brake (page 14) before starting the engine.
2. Turn the fuel cap vent lever (1) and fuel valve (2) to ON.
3. Make sure the engine stop switch (3) is at RUN.
4. Make sure that the transmission is in neutral by depressing the gearshift pedal and checking that the neutral indicator is at N and that the neutral indicator lamp lights.

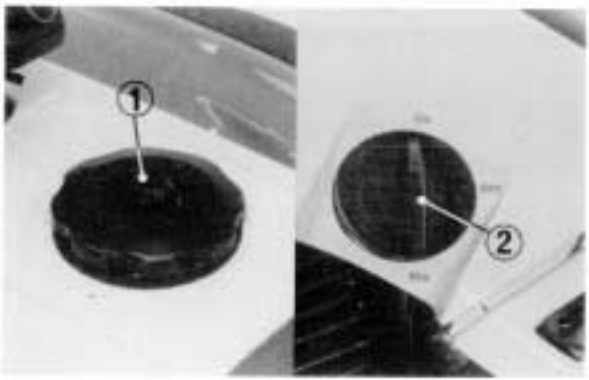

(1) Vent lever (2) Fuel valve

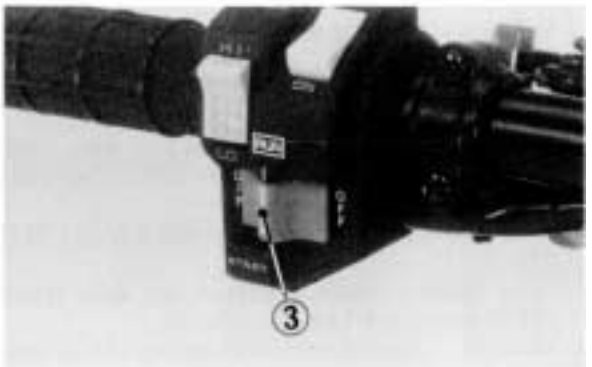

(3) Engine stop switch

Starting Procedure (after Preparation)

To restart a warm engine, follow the procedure for High Air Temperature.

Normal Air Temperature
10°–35°C (50°–95°F)

1. Raise the choke knob (1) to the Fully Closed position (A).
2. Turn the ignition switch (2) to ON.
3. Open the throttle slightly.
4. Press the starter button (3) and start the engine.

NOTE:

* Do not use the electric starter for more than 5 seconds at a time. Release the starter button for approximately 10 seconds before pressing it again.

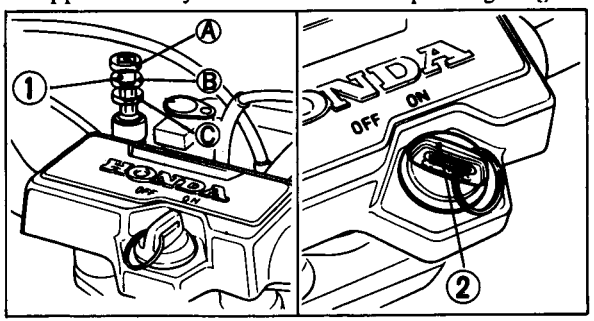

(1) Choke knob (2) Ignition switch

5. Immediately after the engine starts, release the starter button and push the choke knob to the halfway position (B).
6. About a half minute after the engine starts, push the choke knob down all the way to Fully Open (C).
7. If idling is unstable, open the throttle slightly.

High Air Temperature
35°C (95°F) or above

1. Do not use the choke.
2. Open the throttle slightly.
3. Start the engine by pressing the starter button.

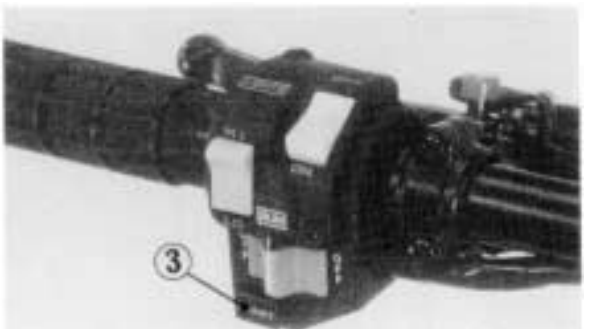

(3) Starter button

Low Air Temperature
10°C (50°F) or below

1. Follow steps 1–5 under Normal Air Temperature.
2. Warm up the engine by opening and closing the throttle slightly.
3. Continue warming up the engine until it will idle smoothly with the choke knob pushed down all the way to Fully Open (C).

CAUTION:

* *Extended use of the choke may impair piston and cylinder wall lubrication.*
* *Do not race the engine during the warm-up period. Racing a cold engine wastes fuel and increases engine wear.*

Recoil Starting

If the engine does not start with the electric starter, use the recoil starter.

1. Raise the decompressor lever (1) up to the DE-COMP position.
2. To use the recoil starter, follow the steps under Preparation and 1–3 under Normal Air Temperature, High Air Temperature or Low Air Temperature.

NOTE:

* A quick vigorous pull on the starter rope (2) will be the most effective way to start the engine.
* The recoil starter cannot be operated when the selector lever is in the reverse position.

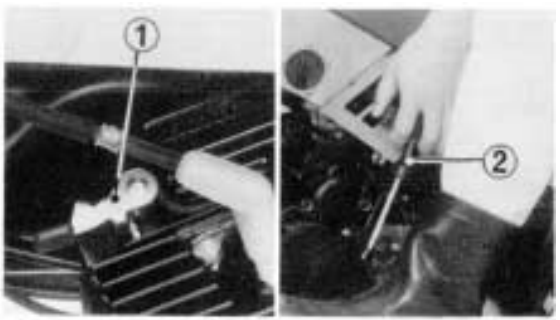

(1) Decompressor lever (2) Recoil starter rope

Flooded Engine

If the engine does not start after several attempts, it may have become flooded with excess fuel. To clear the engine, turn the engine stop switch OFF, push the choke knob down completely, hold the throttle fully open, and briefly press the starter button or pull the recoil starter rope several times.
When the engine is cleared, wait 10 seconds then turn the engine stop switch ON and repeat the normal starting procedure, but do not use the choke.

BREAK-IN

During the first few days of riding, operate your new TRX so that the engine neither pulls laboriously not approaches maximum rpm in any gear. Avoid full throttle operation, and shift gears frequently to vary engine speed. Careful break-in during the initial operating period will measurably extend the service life of the engine.

RIDING

WARNING

* *Review TRX Safety (pages 1–3) before you ride.*
* *Avoid "Wheelies" and jumping as they may cause loss of control.*
* *Ride with your feet on the footpegs at all times. If your feet are removed from the footpegs and touch the ground while the TRX is moving, they may come in contact with the rear wheels.*
* *The TRX 200SX is not designed to be ridden on paved surfaces. Handling and control will be severely affected.*
* *While pulling a trailer, use extreme caution when starting, stopping or turning the TRX.*

Under normal riding conditions it is not necessary or desirable to touch the ground for balance.

For your initial riding practice, select a safe area free of obstacles with a level surface of dirt, sand or snow, etc.

1. Make sure the transmission is in neutral and set the parking brake.
2. After the engine has been warmed up, release the parking brake. The TRX is ready for riding.
3. While the engine is idling, raise the gearshift pedal to shift into 1st (low) gear.
4. Increase engine speed by gradually opening the throttle.
5. When your speed increases, close the throttle and shift to 2nd gear by raising the gearshift pedal.

CAUTION:

* *Do not shift gears without closing the throttle. The engine and drive train could be damaged by overspeed and shock.*

6. This sequence is repeated to progressively shift to 3rd, 4th and 5th (top) gear.

CAUTION:

* *Do not tow the TRX or coast for long distances while the engine is off. The transmission will not be properly lubricated and damage may result.*

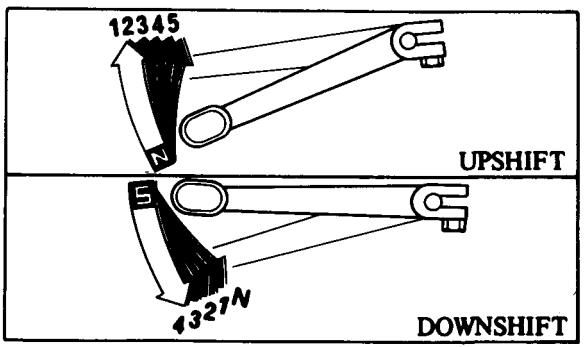

Shifting sequence

Reverse Riding

For reverse riding practice make sure there are no obstacles or people in the area.

1. Make sure the transmission is in neutral and set the parking brake.
2. Start the engine and release the parking brake.
3. While the engine is idling, press the reverse selector knob, squeeze the rear brake/parking brake lever and depress the gearshift pedal into the reverse gear.
4. Release the rear brake/parking brake lever.
5. Ride the TRX cautiously in reverse by gradually opening the throttle.

WARNING

* *When backing up, open the throttle carefully to ride slowly and safely, being careful that there are no obstacles or people behind you.*
* *Avoid sudden application of the throttle or abrupt turns.*
* *Close the throttle and apply both front and rear brakes carefully to stop the TRX when riding in reverse. Applying the rear brake alone may cause the front wheels to lift off the ground.*

Turning Maneuvers

For better traction in off-road use, the TRX has been fitted with a rear axle which drives both rear wheels equally at all times.

When negotiating a turn, the wheel on the outside of the turn must travel a wider radius and thus a greater distance than the inside wheel. As the rear axle does not permit a differing rate of wheel rotation, it is not enough to merely steer the TRX into a turn. The new rider must learn to shift his or her weight and control the throttle to allow the rear tires to negotiate the turn. This is the primary technique to be mastered in riding the Honda TRX. For your initial riding practice, operate the TRX in low gear. Practice turning the TRX at slow, constant speeds. Defer higher speeds until you are confident of your proficiency.

of your proficiency.

To turn, steer in the direction of the turn, leaning your body to the inside of the turn, while supporting your weight on the outer footpeg. Use the throttle to maintain power throughout the turn.

This technique allows the TRX to lean slightly toward the outside, altering the balance of traction between the rear wheels sufficiently to allow them to negotiate the turn.

Once this technique is learned, turning maneuvers can be performed within a relatively small area.

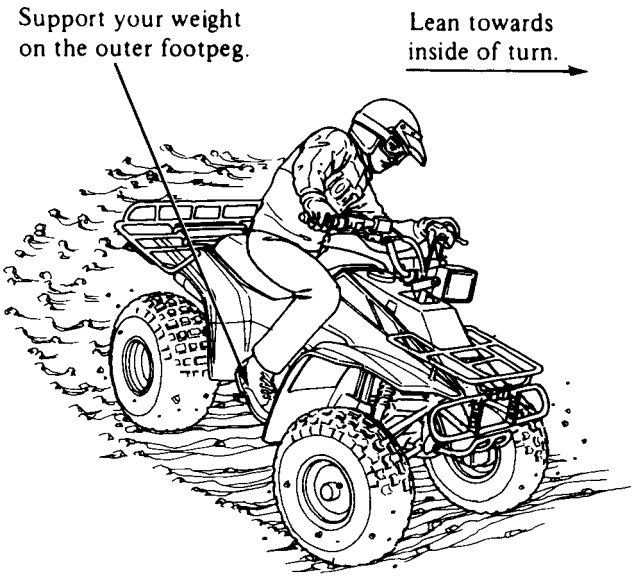

Incorrect turning techniques may cause the front wheels to slide straight ahead when steered without affecting the TRX's direction of travel. If this should occur, close the throttle and come to a stop. Then continue practicing the technique outlined on the preceding page.

If the front wheels tend to skid in mud or snow, you may be able to improve control under these conditions by leaning forward, transferring additional weight to the front wheels.

If the rear wheels inadvertently skid sideways, correct your slide by steering in the direction of the skid if you have room to perform this maneuver safely. Avoid braking or accelerating until you have regained directional control.

To avoid skids while traveling on slippery terrain, the rider must exercise a high degree of caution.

WARNING

* ***Surface composition is a major factor affecting traction. Surfaces that provide extremely good traction or are slippery must not be used for skidding maneuvers. It is dangerous to skid on ice, because you may lose all directional control, and it is dangerous to skid on pavement, because you may regain traction suddenly and unexpectedly, which can cause you to lose your balance and overturn.***

Climbing Hills

Practice climbing on evenly surfaced slopes of less than 20°. The TRX's capability in climbing hills or traversing any specific terrain is dependent upon rider skill. As you gain experience in handling the TRX and learn the hazards to be encountered and your own limitations, you may then proceed to ride more challenging terrain. However, you must first be able to discern and avoid any hill or hazard that would cause the TRX to overturn.

The riding technique for hill climbing involves transferring your weight toward the front wheel to keep it in contact with the ground. This may be done by leaning forward, or for greater weight transference, by standing on the footpegs and leaning forward. Take a running start, in the appropriate gear and speed for the ascent, and climb at a steady rate of speed.

WARNING

* ***Do not apply power suddenly by opening the throttle or changing gears while ascending a hill, or the front wheels may rise from the ground. If the front wheels lift, rider control will be lessened and the TRX may overturn backward.***

If you should find that you have incorrectly estimated climbing capability and lack the power or traction to continue the ascent, then turn the TRX around if space permits, while you still have the forward speed to do so and descend. Avoid stalling part way up a hill, as maneuvering will then become more difficult.

WARNING

* ***Before attempting a turn on a hillside, the rider should first master turning techniques on level ground.***

If you do lose all forward speed and can neither continue uphill nor maneuver the TRX under its own power, apply the front brake to stop. Then dismount and physically turn the machine around. If it cannot be turned and must be backed down, first shift the transmission into neutral. However, we strongly recommend that the rider turn the TRX around rather than back it downhill.

WARNING

* ***To avoid overturning, the rider must exercise a high degree of caution when dismounting or moving the TRX on a hillside.***

* ***Applying the rear brakes or engaging the transmission while rolling backward downhill can easily cause the TRX to overturn and fall on the rider.***

Descending Hills

It is usually advisable to descend hills with the TRX pointed directly downhill, avoiding angles that would cause the vehicle to lean sharply to one side. As you approach the point of descent, stop and survey the terrain below. Never ride headlong past your limit of visibility. When you have picked a safe path of descent, shift the transmission into low gear and descend slowly with the throttle closed. Sit back on the seat, with arms extended and braced on the handlebars.

When descending sand dunes, we recommend that the rider apply the rear brake intermittently to further reduce forward speed.

WARNING

* ***Do not use the front brake when descending hills. The TRX could overturn.***

Braking effectiveness is, of course, reduced while descending any incline with a loose surface.

Traversing Slopes

When riding across a slope at right angles to the incline of the hill, lean your body uphill to maintain balance and stability. On a loose surface such as sand it may become necessary to steer slightly uphill in order to maintain your course of travel.

WARNING

* ***Balance is more precarious while the TRX is tilted to one side. Avoid traversing slopes where there is slippery or difficult terrain.***

Riding Through Water

WARNING

* ***Do not ford any stream with fast flowing water. The tires may float, making it difficult to maintain control.***
* ***Do not ride the TRX through water beyond its limit.***

The Honda TRX can ford water to a depth of approximately 10 inches, although the rider must be careful to avoid getting the spark plug or air cleaner wet.

When crossing streams, choose a course where both banks have gradual inclines. Proceed at a slow, steady speed, and take care to avoid submerged obstacles and slippery rocks.

After riding through water, the brakes may be less effective than normal. Test the brakes after traveling through any water, and if necessary, apply the brakes repeatedly until the heat of friction has dried them, and the brakes regain their normal effectiveness. If they do not dry out and regain their effectiveness, stop the TRX and shut the engine OFF. Set the parking brake ON and drain any trapped water by removing the drain cap (1) from the bottom of the rear brake cover.

CAUTION:

* *If any water drains, it is an indication that the rear brake seals must be replaced. Have these seals checked by your Honda dealer as soon as possible.*

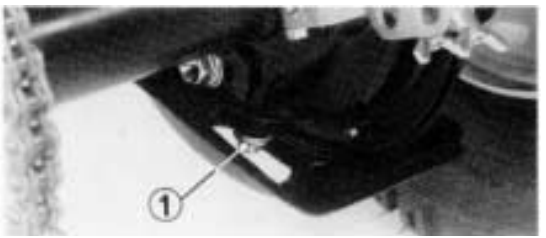

(1) Drain bolt

Mud may have found its way into the front brakes after riding through muddy water. Remove the front brake adjust hole cap from the front wheel rim and flush with clean water thoroughly as soon as possible.

CAUTION:

* *To clean the front brakes, direct a jet of water through the adjusting hole into the brake drum for 1 to 2 minutes with the adjusting hole right up on the rim. Use water below 50°C. Do not allow pressure of the water to exceed 2 kg/cm².*
* *After cleaning, be sure to reinstall the adjusting hole cap.*
* *Use of water above 50°C or in excess of 2.0 kg/cm² may damage the wheel cylinders.*
* *In cold weather below 5°C, use a warm water or clean the brakes in a space with room temperature above 5°C.*

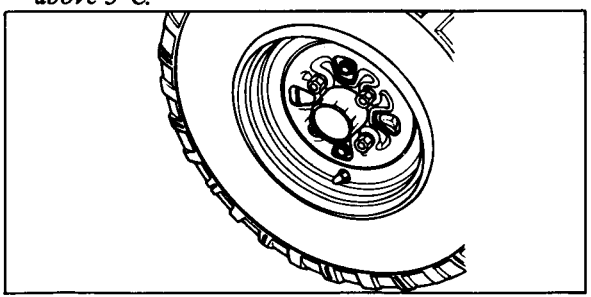

High Altitude Riding

When operating this vehicle at high altitudes the air-fuel mixture becomes overly rich. Above 5,000 feet (1,500 m) driveability and performance may be reduced and fuel consumption increased. The carburetor can be modified to compensate for this high altitude richness. However, the carburetor must be returned to standard factory specifications when lower altitude riding is desired. (See page 46.)

CAUTION:

* *Sustained operation at altitudes below 5,000 feet (1,500 m) with high altitude carburetor modifications may cause engine overheating and damage.*

PARKING

1. Stop the vehicle, shift the transmission into neutral, turn the fuel valve, fuel cap lever, and ignition switch OFF.
2. Pull the rear brake/parking brake lever back and lock it. (See page 12.)

MAINTENANCE SCHEDULE

- The maintenance intervals shown in the following schedule are based upon average riding, conditions, TRX's subjected to severe use, or ridden in unusually dusty areas, require more frequent servicing.
  Perform the Pre-ride Inspection (page 23) at each scheduled maintenance period.

I: Inspect and Clean, Adjust, Lubricate or Replace, if necessary. C: Clean R: Replace A: Adjust			INITIAL SERVICE PERIOD (First week of operation)	REGULAR SERVICE PERIOD (Every 30 operating days)	Refer to page
*	FUEL LINE	YEAR I			44
*	FUEL STRAINER SCREEN	YEAR C			44
*	THROTTLE OPERATION		I	I	58
*	CARBURETOR CHOKE			I	–
	AIR CLEANER	NOTE 1		C	49
	SPARK PLUG			I	48
*	VALVE CLEARANCE		I	I	50–51
	ENGINE OIL		R	R	41
	ENGINE OIL FILTER SCREEN			C	42
*	ENGINE OIL CENTRIFUGE FILTER			C	43
*	CARBURETOR IDLE SPEED		I	I	45

* SHOULD BE SERVICED BY AN AUTHORIZED HONDA DEALER, UNLESS THE OWNER HAS PROPER TOOLS AND IS MECHANICALLY QUALIFIED.

** IN THE INTEREST OF SAFETY, WE RECOMMEND THESE ITEMS BE SERVICED ONLY BY AN AUTHORIZED HONDA DEALER.

I: Inspect and Clean, Adjust, Lubricate or Replace, if necessary. C: Clean R: Replace A: Adjust			INITIAL SERVICE PERIOD (First week of operation)	REGULAR SERVICE PERIOD (Every 30 operating days)	Refer to page
	DRIVE CHAIN	NOTE 1	I, L	I, L	59
	BRAKE FLUID	2 YEARS R		I	54–55
*	BRAKE SHOE WEAR	YEAR I NOTE 2			53–57
	BRAKE SYSTEM		I	I	53–57
*	REVERSE LOCK SYSTEM		I	I	60
*	CLUTCH SYSTEM		I	I	52
*	SUSPENSION			I, L	–
*	NUT, BOLT, FASTENER		I	I	–
**	WHEEL		I	I	–
**	STEERING SYSTEM	YEAR I			–

NOTES: 1. Service more frequently when riding in dusty areas, sand or snow.
2. Service more frequently after riding in very wet or muddy conditions.

WARNING

* ***Always turn the engine off before performing any maintenance operations unless otherwise stated.***
* ***To maintain the safety and reliability of your HONDA TRX do not modify it and use only new genuine HONDA parts or their equivalent when servicing or repairing.***
  The use of replacement parts which are not of equivalent quality may impair the operation of your TRX.

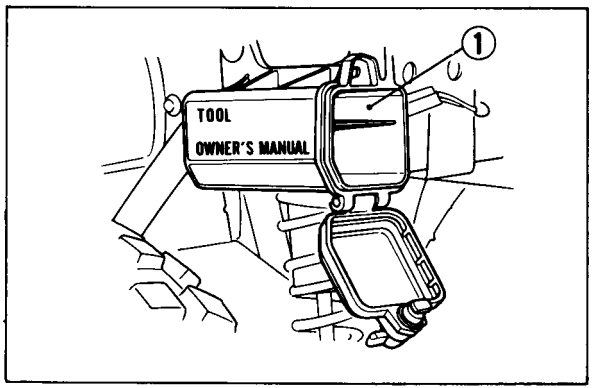

(1) Tool compartment

TOOL KIT

The tool kit is stored in the upper compartment (1) shown below. The tools provided are sufficient to perform routine maintenance and simple repairs. Any extensive work requiring additional tools should be performed by an authorized Honda motorcycle dealer.

Listed below are the items included in the tool kit:

- Screw driver
- Handle for screw driver
- 10 x 12 mm open end wrench
- 14 x 17 mm open end wrench
- Pliers
- 18 x 12 mm box wrench/plug wrench
- Handle
- Tool bag

ENGINE OIL

Engine oil should be changed in accordance with the maintenance schedule. Use motor oils of the grade and viscosity recommended on page 20.

When changing oil, drain the oil from the crankcase while the engine is still warm. This will ensure complete and rapid draining.

1. Remove the oil filler cap from the right crankcase cover.
2. Place a drain pan under the engine to catch the oil, and then remove the drain plug (1) with a 17 mm socket wrench.
3. After the oil stops draining, turn the engine stop switch OFF and pull the recoil starter several times to drain any oil which may be left in the engine.
4. When the oil has been completely drained, check that the drain plug sealing washer is in good condition and install the drain plug.
5. Fill the crankcase with approximately 1.9 ℓ (2.0 US qt) of the recommended grade of motor oil.
6. Make sure that the oil level is between the upper and lower level marks on the dipstick. If necessary, add more oil but do not overfill.

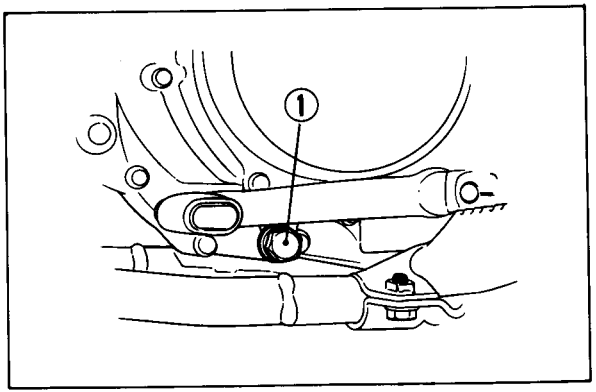

(1) Drain plug

ENGINE OIL STRAINER SCREEN

1. Drain the engine oil.
2. Remove the nut (2) from the reverse shift shaft, and remove the reverse shift arm (3). Disconnect the reverse shift cable (1) from the shift arm.
3. Remove the right crankcase cover (4) by removing the cover bolts.
4. Remove the oil filter screen (5) from the crankcase.
5. Clean the filter screen.

Installation

- Reinstall the oil filter screen by reversing the disassembly sequence.
- Tighten the right crankcase cover bolts to 10–14 N·m (1.0–1.4 kg-m, 7–10 ft-lb) torque.

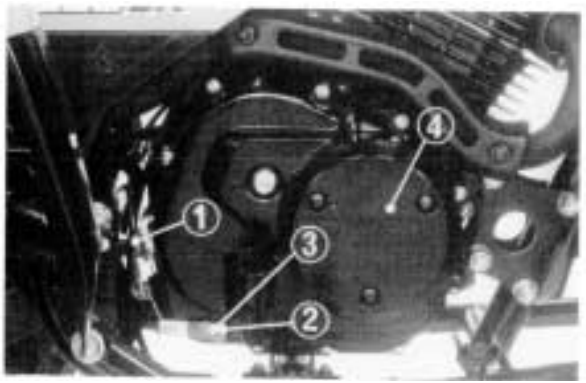

(1) Cable
(2) Nut
(3) Reverse shift arm
(4) Crankcase cover
(5) Oil filter screen

ENGINE OIL CENTRIFUGAL FILTER

1. Remove the right crankcase cover (page 42).
2. Remove the centrifugal filter cover (1) by removing the three bolts (2).
3. Clean the inside of the cover and filter.
4. Make sure the cover gasket is in good condition and reinstall the centrifugal filter cover.

Installation

- Reinstall the centrifugal oil filter by reversing the disassembly sequence.
- Tighten the right crankcase cover bolts (page 42).
- Tighten the centrifugal oil filter cover bolts to 10–14 N·m (1.0–1.4 kg-m, 7–10 ft-lb).

(1) Filter cover (2) Bolts

FUEL STRAINER SCREEN

The fuel strainer is on the left side of the carburetor. The fine mesh screen of the strainer prevents dirt from entering the carburetor passages. Dirt which accumulates in the fuel strainer must be removed periodically, or the fuel flow will eventually be restricted.

WARNING

* *Gasoline is extremely flammable and is explosive under certain conditions. Perform this operation in a well-ventilated area with the engine stopped. Do not smoke or allow flames or sparks in the area.*

1. Turn the fuel valve OFF.
2. Remove the strainer cap.
3. Remove the filter screen (1).
4. Wash the screen in non-flammable or high flash point solvent.

WARNING

* *Never use gasoline or low-flash point solvents for cleaning the fuel strainer. A fire or explosion could result.*

5. Reassemble by reversing the disassembly sequence.
6. Turn the fuel valve ON, and check for leaks. Correct if necessary.

(1) Filter screen

CARBURETOR

The engine must be warm for accurate idle adjustment. Ten minutes of stop-and-go riding is sufficient.

NOTE:

* Do not attempt to compensate for faults in other systems by carburetor adjustment. See your authorized Honda dealer for regularly scheduled carburetor adjustments.

1. Warm up the engine.
2. Adjust idle speed with the throttle stop screw (1).
   IDLE SPEED: 1400 ± 100 rpm
3. To adjust the fuel mixture, turn the air screw (2) clockwise until you hear the engine miss or decrease in speed, then counterclockwise until the engine again misses or decreases in speed. Center the air screw exactly between these two extreme position.
   Usually the correct setting (between extremes of rich and lean) will be found to be 1-1/2 turns open from a fully closed position.

   If idle speed changes after adjusting the fuel mixture, readjust the throttle stop screw.

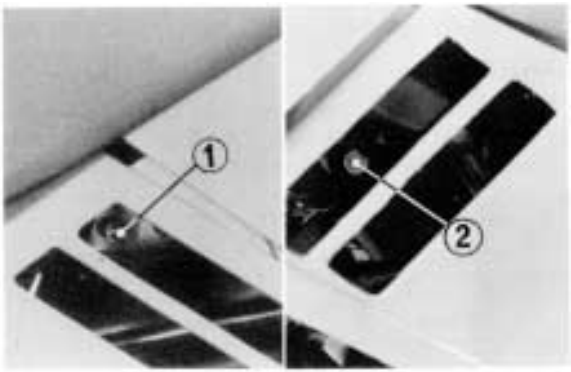

(1) Throttle stop screw (2) Air screw

HIGH ALTITUDE

When operating this vehicle at high altitude the air-fuel mixture becomes overly rich.

Above 5,000 feet (1,500 m) driveability and performance may be reduced and fuel consumption increased.

A high altitude jet is available for carburetor modification to compensate for this high altitude richness. Although installation and adjustment procedures are offered here, we strongly urge that this carburetor modification be performed by your authorized Honda dealer, unless you are mechanically proficient and have the necessary tools.

CAUTION:

* *Sustained operation at altitudes below 5,000 feet (1,500 m) with the high altitude jet installed may cause engine overheating and damage.*

Altitude	Main jet	Air screw
0–5,000 feet	No. 98	Factory preset
5,000–10,000 feet	No. 92	1/4 screw out from factory preset

Installation:

1. Turn the fuel valve OFF .
2. Place the carburetor drain tube in a suitable container. Turn the carburetor drain screw counterclockwise and drain the carburetor.

WARNING

* *Gasoline is extremely flammable and is explosive under certain conditions. Perform this operation in a well-ventilated area. Do not smoke or allow flames or sparks in the area.*

3. Remove the seat (page 50).
4. Loosen the air cleaner connecting tube band screw (1).

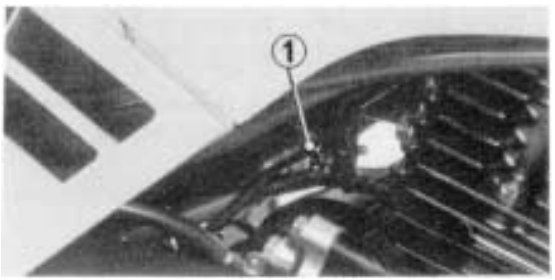

(1) Screw

5. Loosen the carburetor connecting tube band screw (1).
6. Remove the nuts (2) attaching the carburetor to the engine intake pipe.
7. Remove the air cleaner (3) by removing the bolt (4).
8. Remove the carburetor.
9. Remove the float chamber.
10. Remove the standard main jet (5) and install the high altitude main jet in accordance with the chart. Reinstall the float chamber.
11. Install the carburetor. Assure that the drain screw is turned fully clockwise. Turn the fuel valve ON.
12. Start the engine. Adjust the idle speed and air screw (page 46).

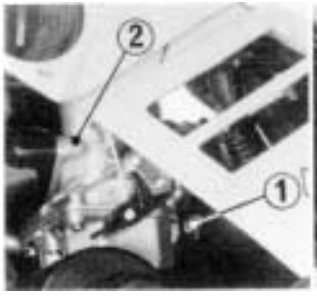

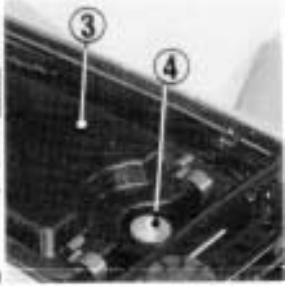

(1) Screw
(2) Nuts
(3) Air cleaner
(4) Bolt

NOTE:

* Adjust the idle speed and air screw at high altitude to ensure proper high altitude operation.

Removal:

1. Follow installation steps 1–9.
2. Reinstall the original main jet.
3. Reinstall the carburetor. Adjust the idle speed and air screw.

NOTE:

* Adjust the idle speed at low altitude to ensure proper low altitude operation.

(5) Main jet

SPARK PLUG

Standard spark plug

NGK:	DR8ES-L
ND:	X24ESR-U

CAUTION:

* *The use of spark plugs of incorrect size or heat range can cause serious engine damage.*

1. Disconnect the spark plug cap.
2. Clean any dirt from around the spark plug base.
3. Remove the spark plug.
4. Visually inspect the spark plug electrodes for wear. The center electrode should have square edges and the side electrode should have a constant thickness. If the electrodes and insulator tip appear unusually fouled or burned, we suggest that you contact an authorized Honda dealer. Discard the spark plug if there is apparent wear or if the insulator is cracked or chipped.
5. Make sure that the spark plug gap is 0.6–0.7 mm (0.024–0.028 in) using a wire-type feeler gauge. If adjustment is necessary, bend the side electrode (1) carefully.
6. When installing the spark plug, screw it in finger tight and then tighten with the plug wrench another 1/2 turn to compress the washer. If you are reusing a spark plug, it should only take 1/8–1/4 turn after the plug seats.

CAUTION:

* *The spark plug must be securely tightened. An improperly tightened plug can become very hot and possibly damage the engine.*

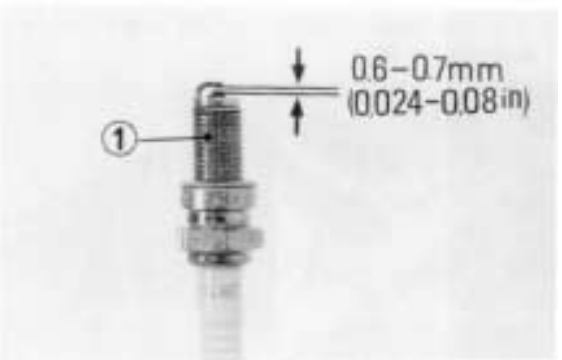

(1) Side electrode

AIR CLEANER

The air cleaner element accumulates dust and must be cleaned periodically. If the TRX is ridden in unusually dusty areas, the element must be cleaned at more frequent intervals than specified in the MAINTENANCE SCHEDULE. To clean the filter element:

1. Remove the seat by pulling the lever (1).
2. Release the four retaining hooks (2) attaching the air cleaner cover and remove the air cleaner cover (3).
3. Remove the air cleaner element (4).

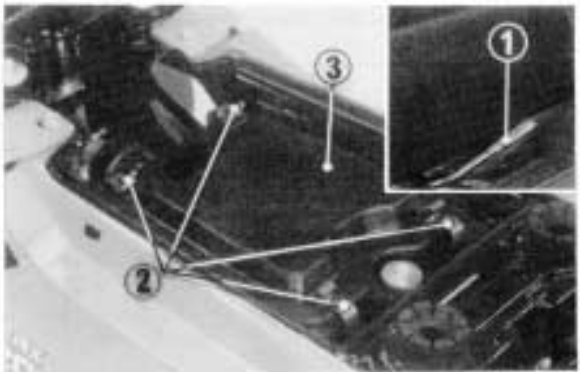

(1) Lever (2) Retaining hooks
(3) Air cleaner cover

4. Wash the element in a non-flammable or high flash point solvent. Allow it to dry thoroughly.

WARNING

* *Never use gasoline or low flash point solvents for cleaning the air cleaner element. A fire or explosion could result.*

5. Soak the filter element in clean gear oil (SAE 80–SAE 90) until saturated, then squeeze out the excess oil.
6. Reassemble in the reverse order of disassembly.

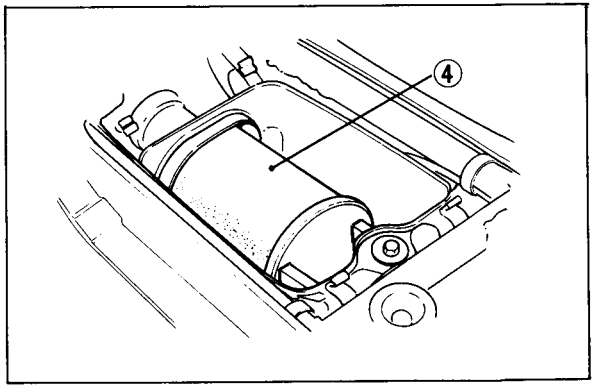

(4) Air cleaner element

VALVES

Valve clearance should be maintained properly. Excessive clearance will cause noise. Insufficient clearance will cause loss of power and could cause valve damage. If the valves are noisy, or if the engine lacks power, adjust the valve clearance as follows.

NOTE:

* Check and adjust valve clearance while the engine is cold. The clearance will change as the temperature rises.

1. Remove the valve adjuster cover (1) from the left of the cylinder head cover by removing the two bolts (2).

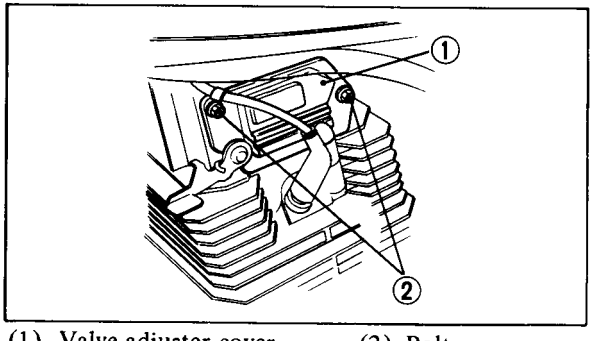

(1) Valve adjuster cover (2) Bolts

2. Remove the timing indicator hole cap (3) between the intake adjuster (4) and the exhaust adjuster (5).
3. Remove the timing mark hole cap (8).
4. Using the recoil starter, rotate the crankshaft until the "T" mark (9) on the alternator rotor aligns with the timing index mark (10) on the left crankcase cover. Make sure the arrow (7) on the camshaft is visible through the timing indicator hole. If the arrow is not visible, rotate the crankshaft 360°(one complete revolution) and realign the "T" mark verify that the arrow is now visible.

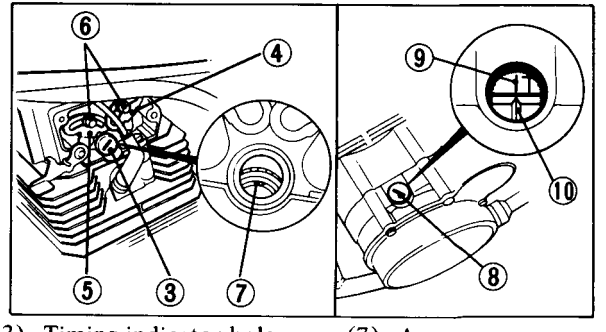

(3) Timing indicator hole cap
(4) Intake adjuster
(5) Exhaust adjuster
(6) Lock bolts
(7) Arrow
(8) Timing mark hole cap
(9) "T" mark
(10) Timing index mark

5. Loosen the valve adjuster lock bolts (6).
6. Move the intake and exhaust adjusters counter-clockwise until you feel slight resistance.
7. Return the adjusters 1/2 a graduation clockwise and tighten the lock bolts securely.

NOTE:

* Make sure the adjusters do not move when tightening the lock bolts. Half of a graduation is equal to 0.08 mm (0.003 in), which is the specified valve clearance.

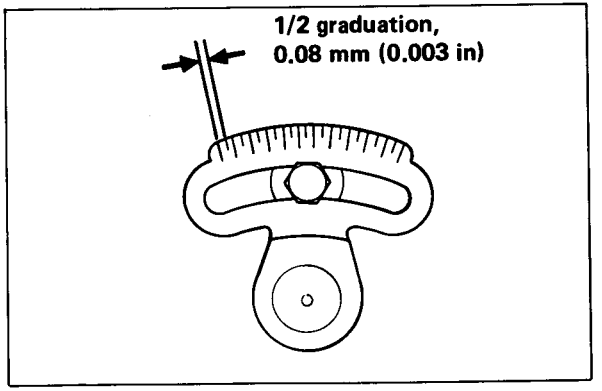

8. Reinstall the removed parts in the reverse order of removal.

CLUTCH

1. Make sure the ignition switch is OFF.
2. Loosen the lock nut (2), and turn the clutch adjuster (1) counterclockwise until you feel slight resistance. Then turn 1/4 turn clockwise, and tighten the lock nut to hold the adjuster in this position.
3. After adjustment, start the engine and test ride the TRX to be certain that the clutch is operating properly.

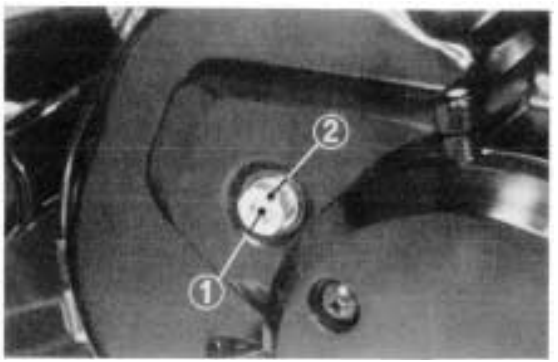

(1) Clutch adjuster (2) Lock nut

BRAKES

Front Brake Lever

This TRX has a hydraulic front drum brake.
Fluid level and shoe lining wear must be inspected periodically. The system must be inspected frequently to ensure there are no fluid leaks.

1. Measure the distance the brake lever moves before the brake starts to take hold.
   Free play, measured at the tip of the front brake lever (1), should be within 25–30 mm (1–1-1/4 in).

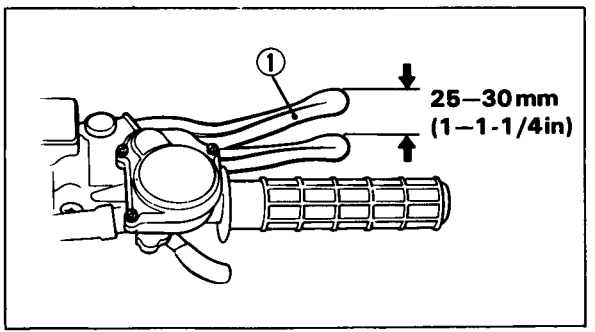

(1) Front brake lever

2. Remove the brake shoe lining inspection hole cap (2) and inspect the lining thickness.
   Lining Thickness:
   Standard: 4.0 mm (0.16 in)
   Service Limit: 2.0 mm (0.08 in)

NOTE:
* If either lining is worn beyond the limit, both brake shoes must be replaced.

3. If the brake lever free play is excessive and the brake linings are not worn beyond the recommended limit, adjust the brake shoe lining-to-drum clearance.

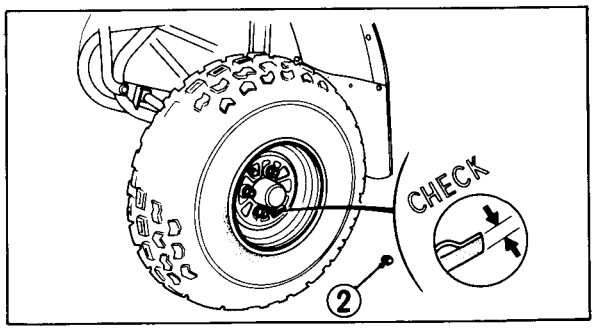

(2) Lining inspection hole cap

4. Recheck the brake lever free play. If free play is still excessive after adjusting the brake lining clearance, there is probably air in the brake system and it must be bled out. See your authorized Honda dealer for this service.

Adjustment:

1. Pump the brake lever 2-3 times firmly and release it.
2. Remove the adjusting hole cap (1).
3. Turn both brake shoe adjusters (2) up with a screwdriver until the front brake locks.

NOTE:

* Do not work on both adjusters at the same time.

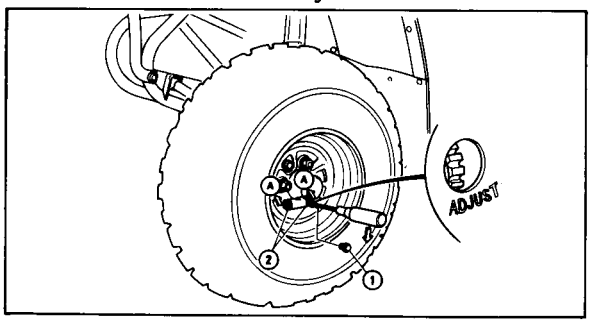

(1) Adjustment hole cap (2) Adjusters
(A) Brake locks

4. Back the adjusters off three clicks and pump the brake lever several times.
5. Turn the wheel manually and make sure it does not drag.
6. Adjust the other front brake.
7. Install the rubber cap.

Brake Fluid Level:

WARNING

* ***Brake fluid may cause irritation. Avoid contact with skin or eyes. In case of contact, flush thoroughly with water and call a doctor if your eyes were exposed.***

Remove the screws, reservoir cover, and diaphragm. Whenever the level is near the lower level mark (3) on the reservoir, fill the reservoir with DOT 3 or 4 BRAKE FLUID from a sealed container up to the upper level mark (4). Reinstall the diaphragm and cover. Tighten the screws securely.

CAUTION

* *When adding brake fluid, be sure the reservoir is horizontal before the cover is removed or brake fluid may spill out.*

* *Use only DOT 3 or 4 brake fluid from a sealed container.*
* *Handle brake fluid with care because it can damage paint and instrument lenses.*
* *Never allow contaminants (dirt, water, etc.) to enter the brake fluid reservoir.*

Other Checks:

Make sure there are no fluid leaks. Check for deterioration or cracks in the hose and fittings.

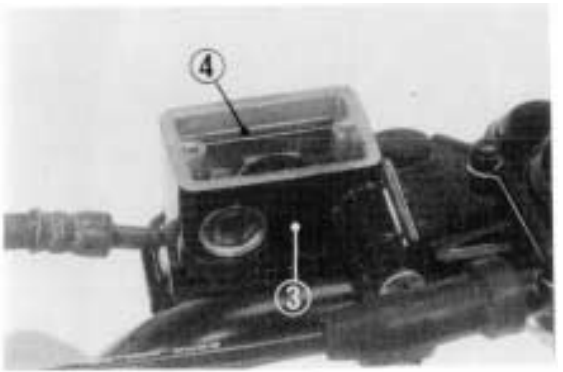

(3) Lower level mark
(4) Upper level mark

Rear Brake Pedal

Measure the distance the rear brake pedal moves before the brake starts to take hold.
Free play, measured at the end of the pedal (1), should be 15–20 mm (5/8–3/4 in.)
Adjust by turning the brake pedal adjuster (2) located on the brake operating rod at the rear of the frame.

NOTE:

* Make sure the cut-out on the adjusting nut is seated on the brake arm pin.

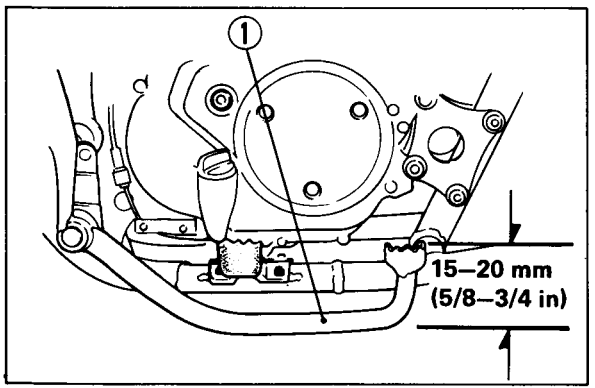

(1) Rear brake pedal

Other Checks:

Check the brake cable for kinks or signs of wear that could cause sticking or failure. Lubricate the brake cable with a commercially available cable lubricant to prevent premature wear and corrosion.
Make sure the brake arm, spring, and fasteners are in good condition.

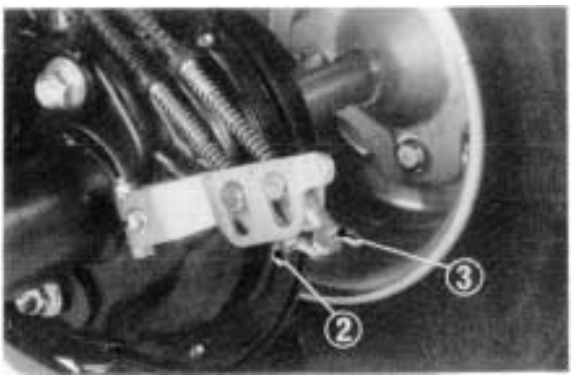

(2) Brake pedal adjuster
(3) Brake lever adjuster

Rear Brake Lever/Parking Brake

Measure the distance the rear brake lever moves before the brake starts to take hold.

Free play, measured at the tip of the brake lever (4), should be within 15–20 mm (5/8–3/4 in). Minor adjustments can be made with the upper adjuster (6) on the front brake lever. Loosen the lock nut (5) and turn the upper adjuster (6). Major adjustments should be made using the lower adjuster (7) located on the brake arm (8).

Other Checks:

Check the brake cable for kinks or signs of wear that could cause sticking or failure. Lubricate the brake cable with a commercially available cable lubricant to prevent premature wear and corrosion. Make sure the brake arm, spring, and fasteners are in good condition.

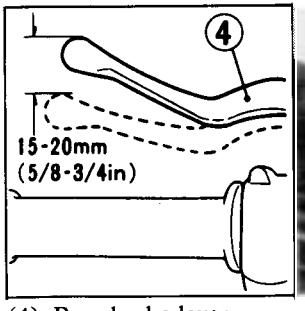

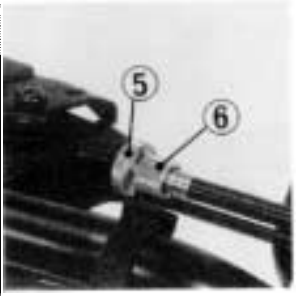

(4) Rear brake lever

(5) Lock nut
(6) Upper adjuster

Wear Indicator:

When the brake is applied, an arrow (10), attached to the brake arm (8), moves toward a reference mark (9) on the brake panel.

If the arrow aligns with the reference mark on full application of the brake, the brake shoes must be replaced. See your authorized Honda dealer for this service.

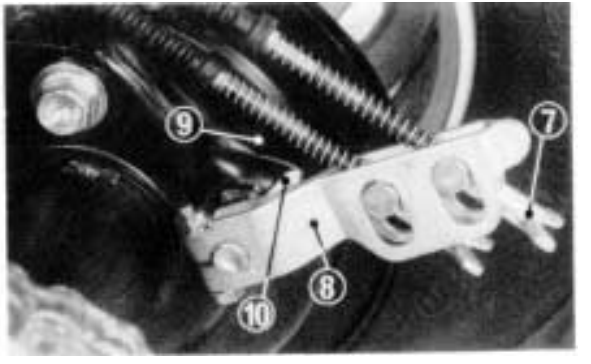

(7) Lower adjuster
(8) Brake arm
(9) Reference mark
(10) Arrow

THROTTLE CABLE

Inspect throttle cable condition and operation. Reroute the cable if it is improperly installed. Replace the cable if it has become worn or kinked. Lubricate the cable with a commercially available cable lubricant to prevent premature wear or corrosion. Free play, measured at the tip of the throttle lever (1), should be maintained at 3–8 mm (1/8–5/16 in). Adjustment can be made with the adjuster (2) on the throttle lever housing. Loosen the lock nut (3) and turn the adjuster.

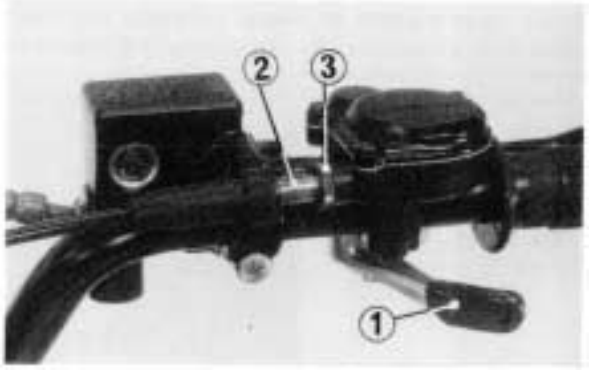

(1) Throttle lever (2) adjuster
(3) Lock nut

DRIVE CHAIN

The drive chain (1) will wear with use and requires periodic adjustment in accordance with the maintenance schedule.

NOTE:

* Check, adjust or lubricate the chain with the engine off.

Chain slack should be checked by measuring the amount of chain slack midway between the sprockets. The amount of slack should be 30–35 mm (1.2–1.4 in). To adjust slack, loosen the rear wheel hub fixing bolts (2). Turn the adjusting nuts (3) to decrease or increase chain slack. Retighten the rear wheel hub fixing bolts.

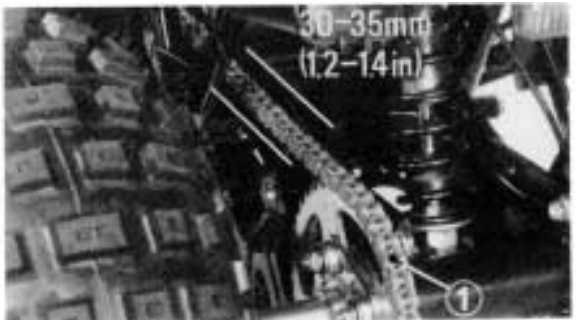

(1) Drive chain

Lubrication and cleaning:

Lubricate every 30 days of riding or sooner if chain appears dry. The O-rings in this chain can be damaged by steam cleaning, high pressure washers, and certain solvents.

Clean the chain with kerosene. Wipe dry and lubricate only with SAE 80 or 90 gear oil. Commercial chain lubricants may contain solvents which could damage the rubber O-rings.

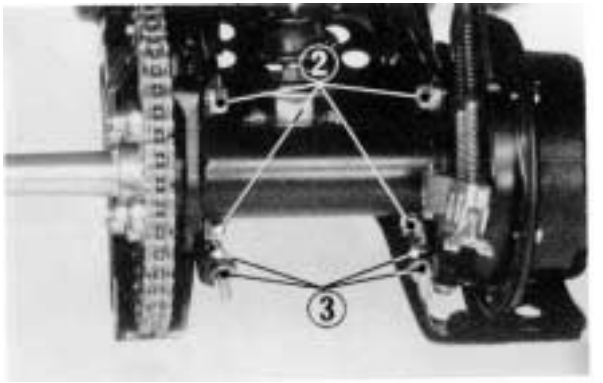

(2) Fixing bolts (3) Adjusting nuts

REVERSE SELECTOR LEVER

Measure the reverse selector lever free play.
Free play, measured at the lever end near the cable, should be within 2–4 mm (1/16–1/8 in).
To adjust, loosen the lock nut (1) and turn the adjusting nut (2). Tighten the lock nut securely.

Other Checks:

Check the reverse selector cable and lever for a loose connections, or other damage.

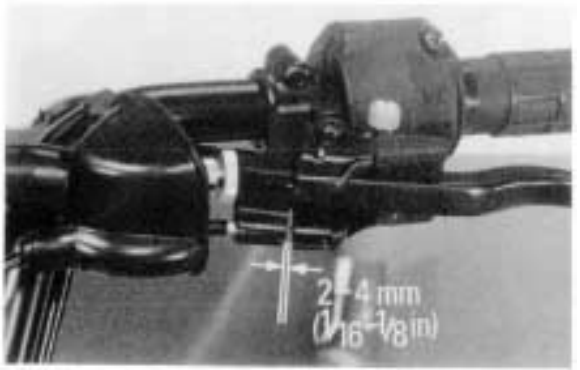

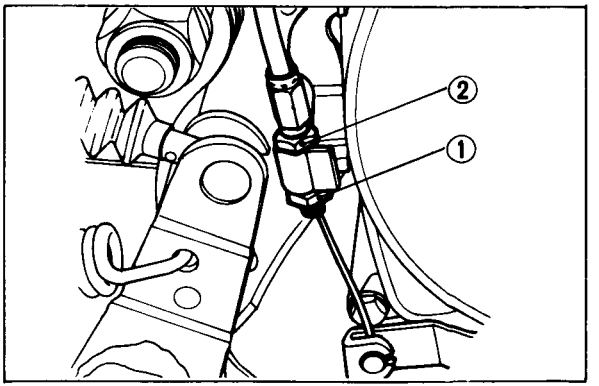

(1) Lock nut (2) Adjusting nut

Storage

Extended storage, such as for winter, requires that you take certain steps to reduce the effects of deterioration from non-use of the TRX. In addition, necessary repairs should be made BEFORE storing the TRX, otherwise, these repairs may be forgotten by the time the TRX is removed from storage.

1. Change the engine oil and the oil filter screen.
2. Lubricate the drive chain.
3. Drain the fuel tank and carburetor. Spray the inside of the tank with an aerosol rust-inhibiting oil. Reinstall the fuel cap on the tank.

WARNING

* ***Gasoline is flammable and is explosive under certain conditions. Do not smoke or allow flames or sparks near the equipment while draining fuel.***

4. Remove the spark plug and pour a tablespoon (15–20 cc) of clean engine oil into the cylinder. Operate the starter for a few seconds to distribute the oil, then reinstall the spark plug.

NOTE:

* When turning the engine over, the Engine Stop Switch should be OFF and the spark plug placed in its cable cap and grounded to prevent damage to the ignition system.

5. Remove the battery. Store in an area protected from freezing temperatures and direct sunlight.
6. Wash and dry the TRX. Wax all painted surfaces.

7. Inflate the tires to their recommended pressures. Place the TRX on blocks to raise all of the tires off the ground.
8. Cover the TRX (don't use plastic or other coated materials) and store in an unheated area, free of dampness with a minimum of daily temperature variation. Do not store the TRX in direct sunlight.

Removal from Storage

1. Uncover and clean the TRX. Change the engine oil if more than 4 months have passed since the start of storage.
2. Check the voltage and slow charge the battery if it is below 12.8V. Install the battery.
3. Drain any excess aerosol rust-inhibiting oil from the fuel tank. Fill the fuel tank with fresh gasoline.
4. Perform all Pre-ride Inspection checks (page 24). Test ride the TRX at low speeds in a safe riding area.

1. Turn the fuel cap lever and fuel valve to OFF.
2. Place the carburetor drain tube in a suitable container.
3. Turn the drain screw counterclockwise to drain the gasoline from the carburetor.

WARNING

* *Gasoline is flammable and is explosive under certain conditions. Do not smoke or allow flames or sparks near the equipment while draining fuel.*
* *Never incline the machine with the front wheel up, or rest it on its side without draining the fuel and removing the battery. Fuel vapor or spilled fuel may ignite and the battery may leak electrolyte.*

4. After draining, turn the drain screw clockwise until tight.

NOTE:

* Be sure the fuel drain is closed (screw turned clockwise) before refueling the TRX.
* It is unnecessary to drain the engine oil from the crankcase, as no appreciable oil leakage will occur when the TRX is rested on its side.

5. Remove the battery, disconnecting the negative (−) terminal first, then the positive (+) terminal. When reinstalling the battery, connect the positive (+) terminal first, then the negative (−) terminal.
6. If wheel removal is required when transporting, follow the procedures on the following pages.

Front and Rear Wheel Removal

1. Place a support block under the vehicle and raise the front and rear wheels off the ground.
2. Loosen the wheel nuts (1) with a 17 mm socket wrench.
3. Remove the wheels.

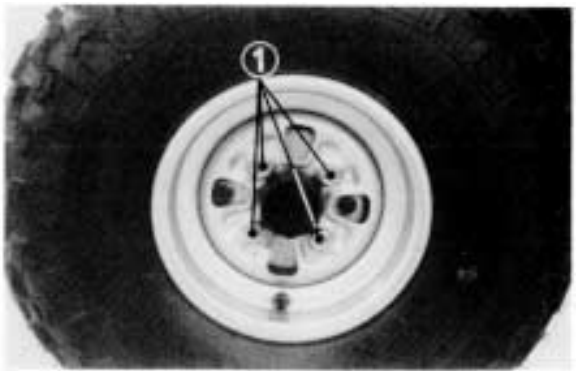

(1) Wheel nuts

Installation:

Reinstall the front and rear wheels and tighten the wheel nuts (1) in a cross-pattern, torquing them to 60–70 N·m (6.0–7.0 kg-m, 43–50 ft-lb).

WARNING

* ***If a torque wrench was not used for installation, see your authorized Honda dealer as soon as possible to verify proper assembly.***
* ***Install the wheels with the tire valve facing the outside.***
* ***Install the wheel nuts with their tapers on the inside as shown.***

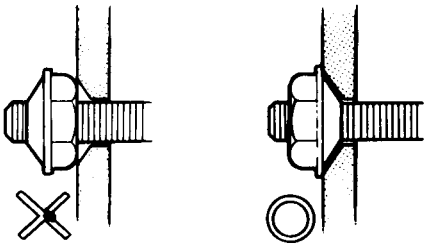

SPECIFICATIONS

DIMENSIONS	
Overall length	1,660 mm (65.4 in)
Overall width	1,000 mm (39.4 in)
Overall height	1,015 mm (40.0 in)
Wheelbase	1,065 mm (41.9 in)
WEIGHT	
Dry weight	172 kg (378 lbs)
CAPACITIES	
Engine oil	1.9 ℓ (2.0 US qt)
Fuel tank	8.0 ℓ (2.1 US gal)
Fuel reserve capacity	2.0 ℓ (0.52 US gal)
Passenger capacity	Operator only
ENGINE	
Bore and stroke	65 x 60 mm (2.56 x 2.36 in)
Compression ratio	9.0 : 1
Displacement	199.1 cc (12.1 cu-in)
Spark plug gap	0.6–0.7 mm (0.024–0.028 in)
Valve clearance	0.08 mm (0.003 in)

CHASSIS AND SUSPENSION	
Caster angle	4°28′
Trail length	18mm (0.71 in)
Tire size, front	20 x 7.00–8
rear	22 x 11.00–8
POWER TRANSMISSION	
Primary reduction	3.0870
Final reduction	3.5000
Gear ratio, 1st	3.5455
2nd	2.2667
3rd	1.6316
4th	1.2727
5th	1.0417

WIRING DIAGRAM

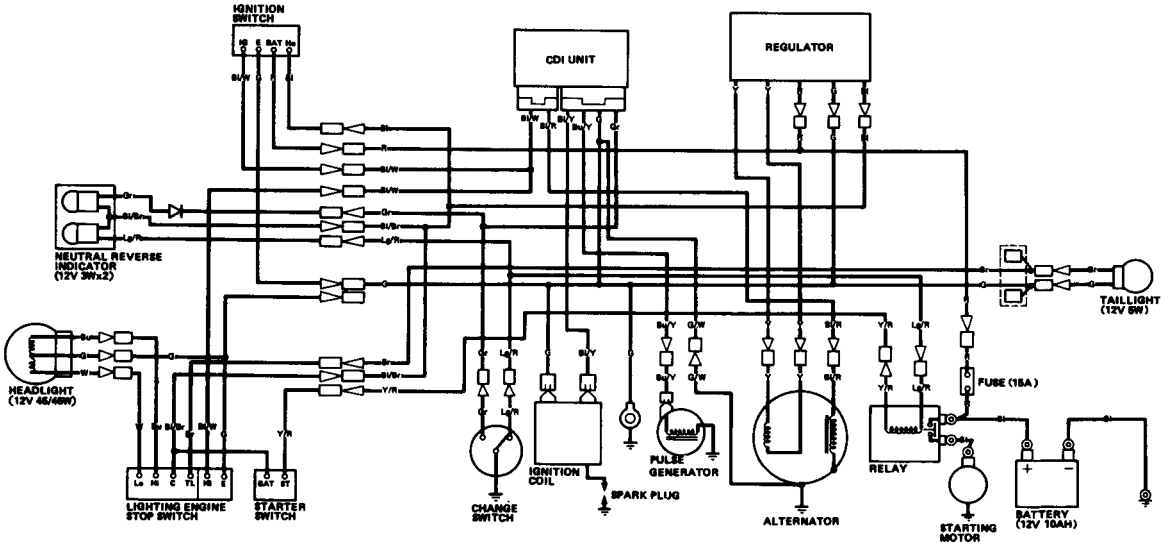

IGNITION SWITCH CONTINUITY

	IG	E	BAT	Ho
OFF	○	○		
ON			○	○
Color	Sl/W	G	R	Bl

SWITCH CONTINUITY

LIGHTING SWITCH				DIMMER SWITCH				ENGINE STOP SWITCH			STARTER SWITCH		
	C	TL	(HL)		Hi	(HL)	Lo		E	IG		BAT	ST
OFF				Hi	○	○		OFF	○	○	FREE		
ON	○	○	○	(N)		○	○	RUN			PUSH	○	○
Color	Sl/Br	Br		Lo		○	○	OFF	○	○	Color	Sl/Br	Y/R
				Color	Br		W	Color	G	Sl/W			

INTERNAL CONNECTION

INTERNAL CONNECTION

Bl	BLACK	Br	BROWN
Y	YELLOW	O	ORANGE
Bu	BLUE	Lb	LIGHT BLUE
G	GREEN	Lg	LIGHT GREEN
R	RED	P	PINK
W	WHITE	Gr	GRAY

00302-HB3-0000

TRX200SX

HONDA

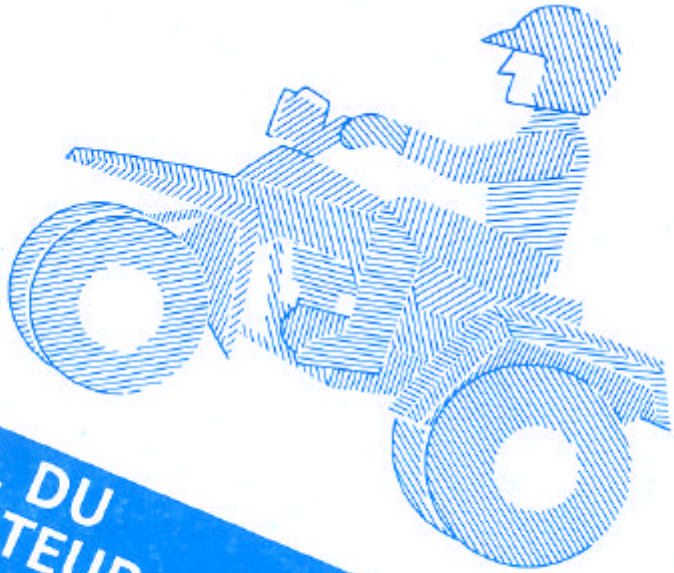

MANUEL DU CONDUCTEUR

88HB3600
00X38-HB3-6000

Ⓜ2008509G
英仏 PRINTED IN JAPAN