HONDA

4x4 TRX350

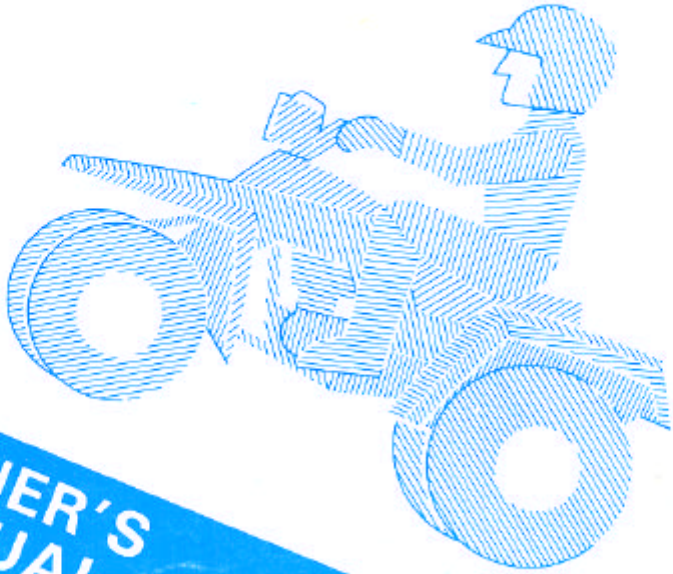

OWNER'S MANUAL

IMPORTANT NOTICE

- **OPERATOR ONLY. NO PASSENGERS.**

  This vehicle is designed and constructed as an operator-only model. The vehicle load limit and seating configuration do not safely permit the carrying of a passenger.

- **FOR OFF-ROAD USE ONLY.**

  This vehicle is designed and manufactured for off-road use only.

- **READ THIS OWNER'S MANUAL CAREFULLY**

  Pay special attention to statements preceded by the following words.

WARNING

Indicates a strong possibility of severe personal injury or loss of life if instructions are not followed.

CAUTION:

Indicates a possibility of personal injury or equipment damage if instructios are not followed.

NOTE: Gives helpful information.

This manual should be considered a permanent part of the TRX and should remain with the TRX when resold.

HONDA TRX 350
OWNER'S MANUAL

All information in this publication is based on the latest product information available at the time of approval for printing. HONDA MOTOR CO., LTD. reserves the right to make changes at any time without notice and without incurring any obligation.

No part of this publication may be reproduced without written permission.

© Honda Motor Co., Ltd. 1986

PREFACE

This booklet is your guide to the basic operation and proper maintenance of your new Honda TRX. Please take the time to read it carefully. Details necessary for riding the Honda TRX are given to acquaint the new owner with special riding techniques to be learned. When service is required, remember that your Honda dealer knows your vehicle best. If you have the required mechanical "know-how" and tools, your dealer can supply you with an official Honda Shop Manual to help you perform many maintenance and repair tasks.

Thank you for selecting a Honda. We wish you continued riding pleasure in the miles ahead.

CONTENTS

	Page
FOURTRAX SAFETY	1
Safe Riding Rules	3
Protective Apparel	3
Modifications	3
Post-Ride Cleaning and Inspection	4
Loading and Accessories	4
DESCRIPTION	6
Parts Location	6
Serial Numbers	8
Parts Function	9
Fuel	21
Engine Oil	24
Tires	26
Battery	28
Rear Shock Absorber	29
OPERATION	30
Pre-Ride Inspection	30
Starting the Engine	31
Break-in	34
Riding	35
Parking	46
MAINTENANCE	47
Maintenance Schedule	47
Tool Kit	49
Fuel Filter	50
Throttle Operation	51
Carburetor Choke	52
Air Cleaner	52
Spark Plug	54
Valve Clearance	55
Engine Oil and Filter	59
Carburetor	60
High Altitude Adjustment	61
Final Drive Oil	64
Brakes	65
Clutch	70
Skid and Guard Plates	71
STORAGE GUIDE	72
TRANSPORTING	74
SPECIFICATIONS	77
WIRING DIAGRAM	78

Read these WARNINGS before you ride!

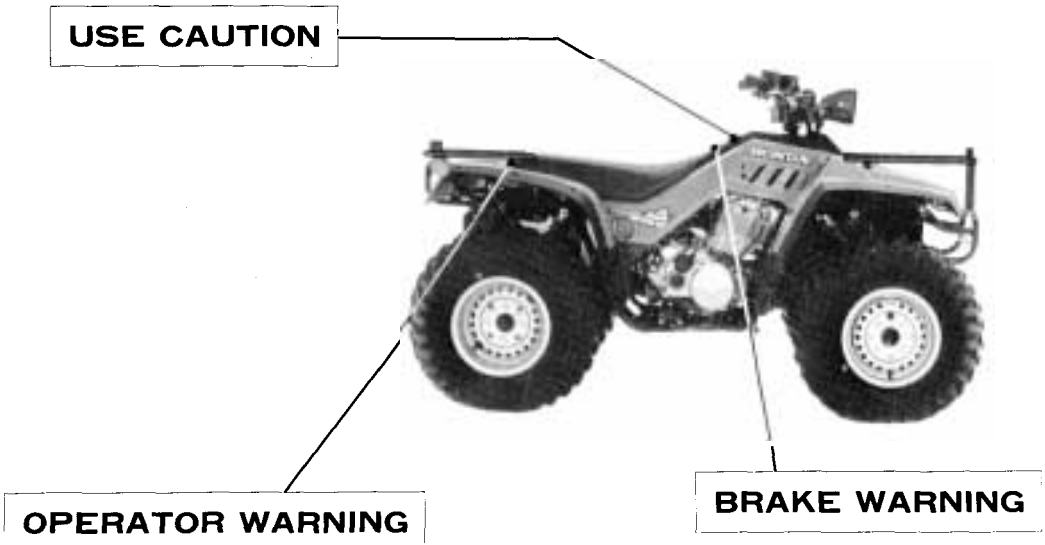

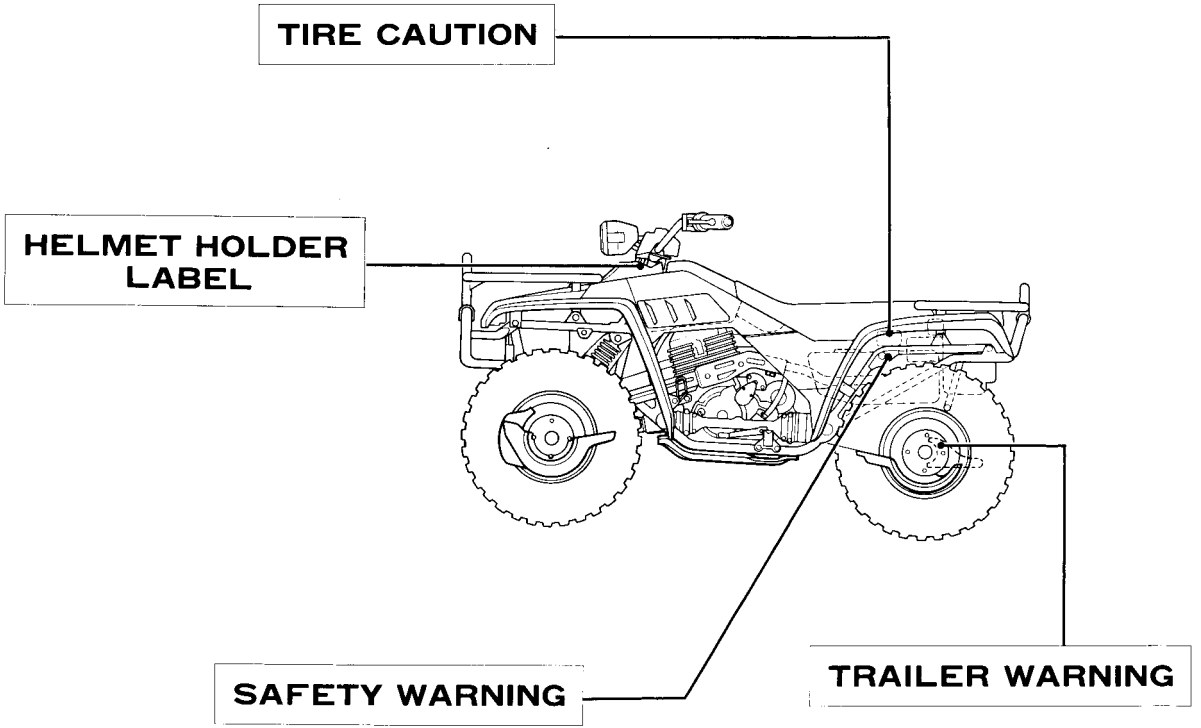
TIRE CAUTION
HELMET HOLDER LABEL
SAFETY WARNING
TRAILER WARNING

WARNING

* ***TRX riding requires special efforts on your part to ensure your safety. Know these requirements before you ride.***
* ***Avoid riding on paved surfaces as handling can be seriously affected. If it is necessary, ride at reduced speeds and avoid sudden turns.***

SAFE RIDING RULES

* Always make a pre-ride inspection (page 30) before you ride the TRX. You may prevent an accident of equipment damage.
* Always obey local off-road riding laws and regulations.
* Obtain permission to ride on private property. Avoid posted areas and obey "no trespassing" signs.
* Do not ride fast on unfamiliar terrain or when visibility is limited. Before riding in a new area, check the terrain thoroughly. Never ride headlong past your limit of visibility. It is sometimes impossible to see obstructions, holes and depressions. Always exercise caution.
* Your ability to operate the TRX safely is largely dependent upon your proper judgement.
* Do not use the flag pole bracket as a trailer hitch.
* Maintain a safe distance between your TRX and other off-road vehicles.
* Do not ride on or near railroad tracks as it is difficult to hear an approaching train.
* When you select reverse gear, make sure there are no obstacles or people behind you. When it is safe to proceed, ride slowly.
* Alcohol, drugs and TRX's don't mix. Even the smallest amount of alcohol can impair your ability to operate your TRX safely. Likewise, drugs, even if prescribed by a physician, can be dangerous while operating a TRX. Consult your doctor to be sure it is safe to operate a motor vehicle after taking medication.

PROTECTIVE APPAREL

* Always wear a helmet. You should also wear a face shield or goggles, boots, gloves and protective clothing.
* The exhaust system becomes very hot during operation and it remains hot after operation. Never touch any part of the hot exhaust system. Wear clothing that fully covers your legs.

MODIFICATIONS

* Modification of the TRX, or removal of original equipment, may render the vehicle unsafe or illegal.
* Spark arresters and mufflers are required in most areas. Don't modify your exhaust system. Remember that excessive noise bothers everyone and creates a bad image for off-road vehicles.

POST-RIDE CLEANING AND INSPECTION

To ensure safe handling and braking efficiency, thoroughly clean the entire vehicle after riding, and then carefully check the brake system, steering system, suspension system, tires and underside of the vehicle. Replace or repair any part that is damaged. Also, carefully inspect the exhaust system; replace or repair the exhaust system if necessary.

LOADING AND ACCESSORIES

WARNING

* ***To prevent an accident, use extreme care when riding with accessories and cargo. Addition of accessories and cargo can reduce the TRX's stability, performance, and safe operating speed. Slow down to 10 mph or less when loaded with cargo or pulling a trailer.***

The combined weight of the rider, cargo, and all accessories must not exceed **220 kg (485 lbs)** which is the vehicle capacity load.

The following loading and towing capacity data is valid only when the riding terrain is level and flat. For different riding terrains, you must exercise your own judgement to load and ride the TRX safely because carrying cargo car reduce the ability of the TRX to operate on slopes or other rough terrain.

Never exceed the loading capacities given here.

1. Load cargo on the rear carrier as far forward as possible. Do not allow cargo to extend beyond the end of rear carrier.

Front carrier	**30 kg (66 lbs)**
Rear carrier	**60 kg (133 lbs)**

NOTE:
The front and rear carriers are optional equipment.

2. When towing a trailer, care should be taken to maintain balance and stability. Place cargo in the trailer so that it will not cause the front wheels to lift off the ground during travel.

Tow weight (Trailer plus cargo weight)	**383 kg (850 lbs)**
Tongue weight (Weight on hitch point)	**14 kg (30 lbs)**

3. When towing a trailer and carrying cargo, the combined tongue weight and rear cargo weight should not exceed 45 kg (100 lbs).
4. Do not obstruct the headlight beam or handlebar movement with cargo.
5. Do not ride with a passenger on the front or rear carrier.
   This TRX is not designed to carry a passenger.

PARTS LOCATION

(1) Fuel tank cap
(2) Right hand brake lever
(3) Throttle lever
(4) Indicator lamps
(5) Ignition switch
(6) 12V DC Receptacle
(7) Fuel valve
(8) Kickstarter pedal
(9) Brake pedal
(10) Oil filler cap/dipstick

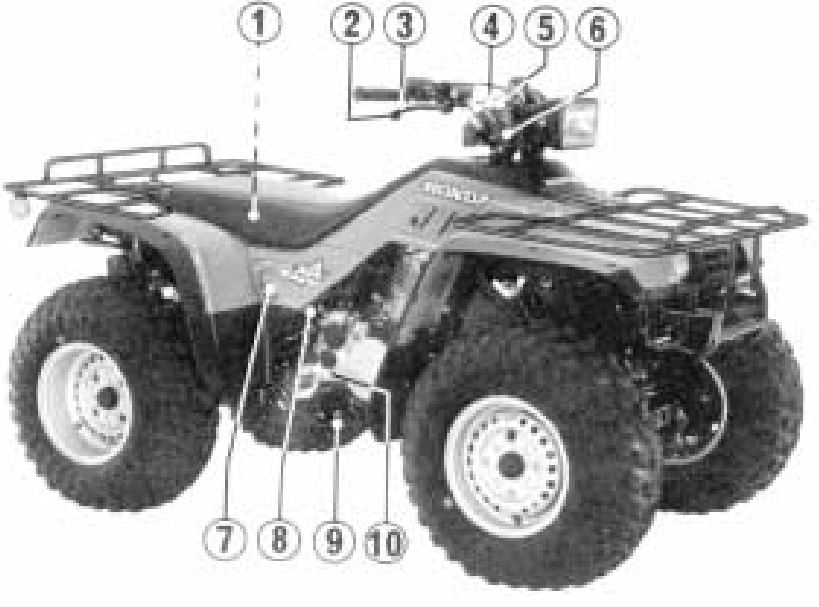

(11) Helmet holder
(12) Parking brake lock lever
(13) Reverse selector lever
(14) Handlebar switches/choke lever
(15) Left hand lever/parking brake
(16) Tool set/air pressure gauge
(17) Storage compartment
(18) Gearshift pedal
(19) Accessory lights

SERIAL NUMBERS

The frame and engine serial numbers are required by your dealer when ordering replacement parts. Record the numbers here for your reference.

FRAME NO. _____

The frame serial number (1) is stamped on the front of the frame. The engine serial number (2) is stamped on the right crankcase.

ENGINE NO. _____

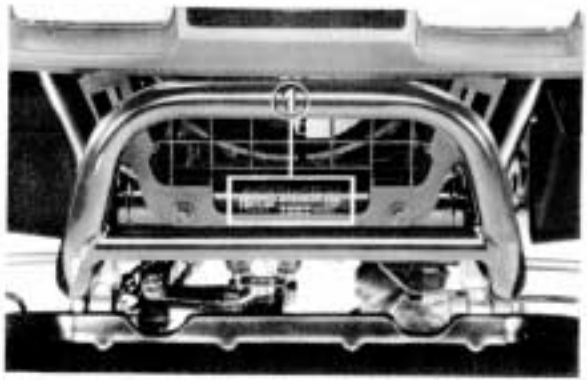

(1) Frame serial number

(2) Engine serial number

PARTS FUNCTION

Ignition Switch

The ignition switch (1) is on the handlebar upper holder.

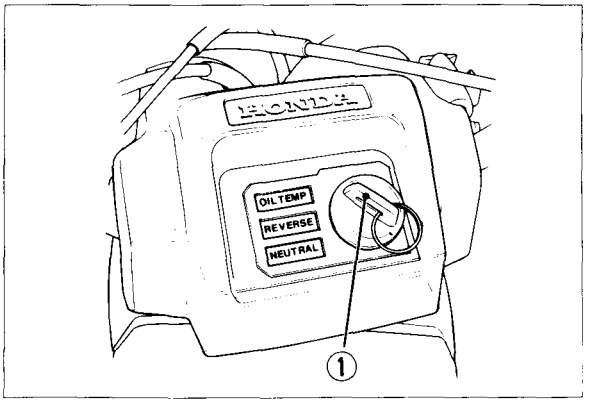

(1) Ignition Switch

Key Position	Function	Key Removal
OFF	Engine and headlight cannot be operated.	The key can be removed.
ON	Headlights and accessory lights can be turned on. With the engine stop switch at RUN and transmission in neutral, the engine can be started.	The key cannot be removed.

Starter Button

The starter button (1) is below the headlight switch. When the starter button is pressed, with the transmission in neutral and the ignition switch on, the starter motor will crank the engine.

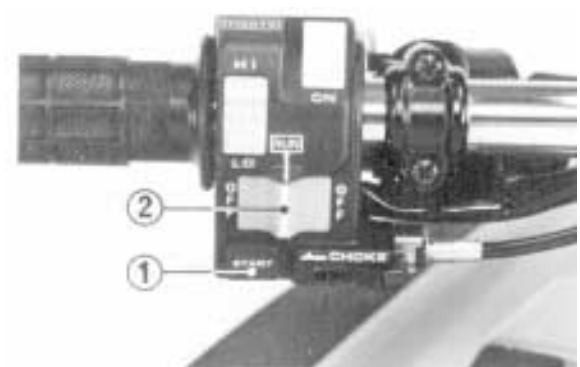

(1) Starter button (2) Engine stop switch

Engine Stop Switch

The three position engine stop switch (2) is next to the left handlebar grip. When the switch is in the RUN position, the engine will operate. When the switch in either OFF position, the engine will not operate.

This switch is intended primarily as a safety or emergency switch and should normally remain in the RUN position.

NOTE:

* If your TRX is stopped with the ignition switch ON and the engine stop switch OFF, the headlight and accessory lights will still be on, resulting in battery discharge.

Headlight and Dimmer Switches

The headlight (1) and headlight dimmer (2) switches are above the engine stop switch.

Turning the headlight switch ON causes the headlight and any accessory lights to light. Select headlight high beam (HI) or low beam (LO) with the dimmer switch.

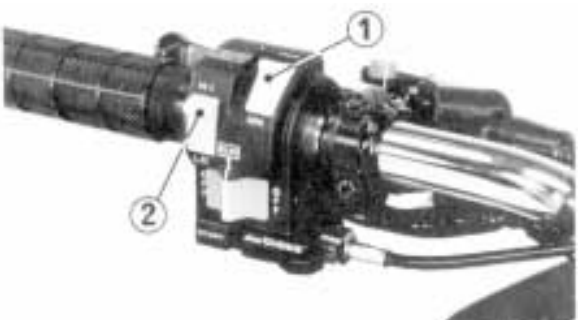

(1) Headlight switch (2) Headlight dimmer switch

Engine Oil Temperature Warning Lamp

When the engine oil temperature becomes too high, the engine oil temperature warning lamp will light.

NOTE:

The engine oil temperature warning lamp will light but go out several seconds after turning the ignition switch ON.

CAUTION:

* If the engine oil temperature warning lamp lights while you are riding, stop the vehicle with the engine running at the idle speed to let it cool. Failure to stop the vehicle immediately will adversely affect the service life of the engine.

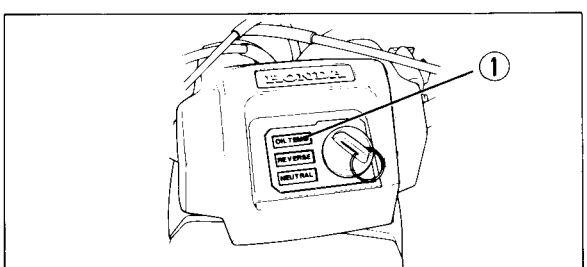

(1) Engine oil temperature warning lamp

An electric fan is used to automatically provide sufficient air flow through the oil cooler before the engine oil temperature becomes too high.
If the warning lamp goes on frequently while riding, or it does not light when the ignition switch is turned on, have your TRX inspected by your authorized Honda dealer.

CAUTION:
* Do not carry or store articles on the front bumper as such practice may restrict air flow through the engine and oil cooler, resulting in engine overheating.

Reverse Indicator Lamp

This TRX is equipped with a reverse indicator lamp (1) to show when the transmission is in reverse. The reverse indicator lamp is on the handlebar cover and will light when the transmission is in reverse with the ignition switch ON.

Neutral Indicator Lamp

This TRX is equipped with a neutral indicator lamp (2) to show when the transmission is in neutral. The neutral indicator lamp is on the handlebar cover and will light when the transmission is in neutral with the ignition swotch ON.

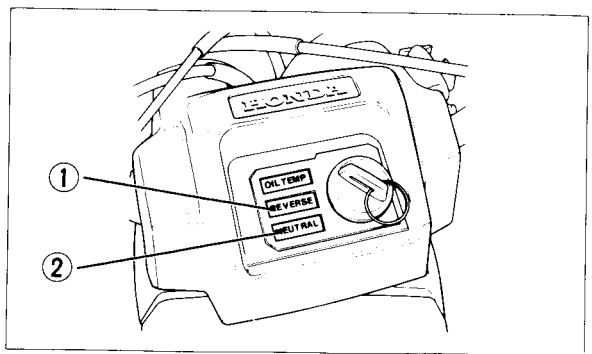

(1) Reverse indicator lamp
(2) Neutral indicator lamp

Throttle Lever

The throttle lever (1) is next to the right handlebar grip and is operated by the rider's thumb. Pressing the lever forward opens the throttle. When the lever is released, spring tension closes the throttle automatically.

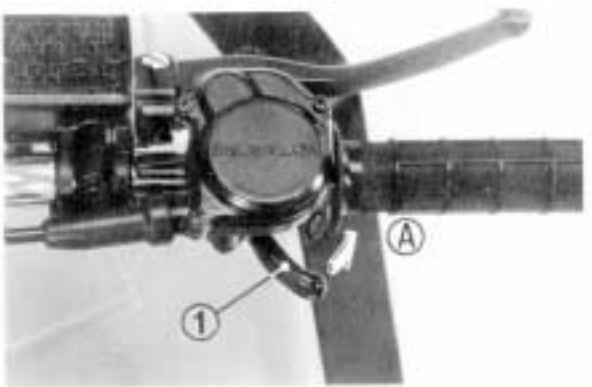

(1) Throttle lever (A) Open

Choke Lever

The choke lever (1) is next to the left handlebar grip. Move the choke lever while pushing it to the left for starting the engine when cold. Move the lever while pushing it to the right as the engine attains normal operating temperature.

To restart a warm engine, it is not necessary to use the choke.

(1) Choke lever

Brake Levers/Parking Brake

The front brakes are operated by the right hand brake lever. The left hand brake lever (1) and the brake pedal both operate the rear brake. Either one can be used to brake the TRX. The left brake lever has the added feature of a lock (2) which allows the lever to be used as a parking brake.

WARNING

Because 4-wheel drive interconnects all four wheels; use of only the right hand lever or the left hand lever or pedal will brake the front and rear wheels. The front brake is designed to be less effective when rolling backwards, and it may not allow any of the wheels to lock. So, you may also have to apply the rear brakes gradually in order to stop. Similarly, when going forward, the right hand lever may not lock the wheels, and the left hand lever or the brake pedal may also be needed to achieve lockup or a maximum performance stop. These braking features are important in steep terrain because they mean that the use of either brake lever or the brake pedal will brake the downhill wheels, which may cuase a pitch over tendency. So, you must use the brakes carefully on steep slopes.

Pull the left brake lever back and lock it with the lock lever. Always apply the parking brake when parking the TRX and when starting the engine.

The parking brake is unlocked by squeezing the left brake lever.

NOTE:

* Use of the parking brake in freezing weather may cause the brakes to freeze in the locked position.

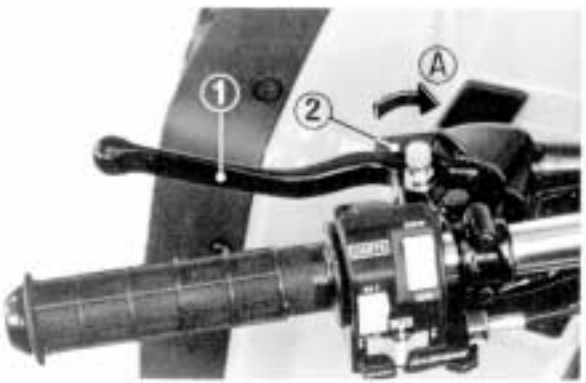

(1) Brake lever/Parking brake (2) Lock lever
(A) Lock

Helmet Holder

The helmet holder (1) is located on the left side of the fork bridge. To use the helmet holder, hand your helmet on the holder.

WARNING

* ***Do not operate the TRX with a helmet attached to the holder. The helmet holder is designed for use while parked.***

(1) Helmet holder

Storage Compartment/Owner's Manual Compartment

The storage compartment (1) is behind the seat. Pull the lever (2) up to open. The owner's manual compartment (3) is in the storage compartment.

This owner's manual should be stored in the compartment. When washing your TRX or riding through the water, be careful not to flood this area with water.

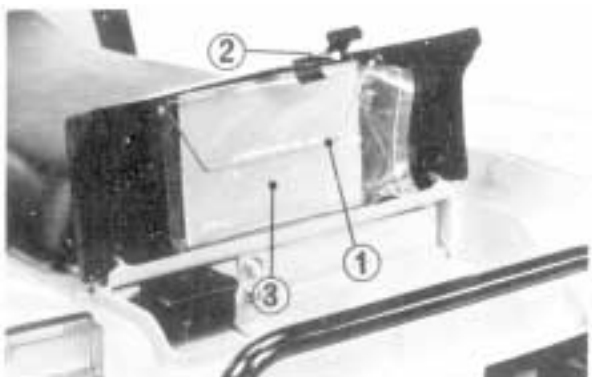

(1) Storage compartment
(2) Lever
(3) Owner's manual compartment

Seat Removal

1. Release the seat lock by moving the seat lock lever (1) at the left side of the seat toward the rear.
2. Remove the seat by lifting it upward.

Installation

1. Insert the four seat studs (2) into the holes of the grommets on the frame.
2. Press down on the seat until the seat latch engages.

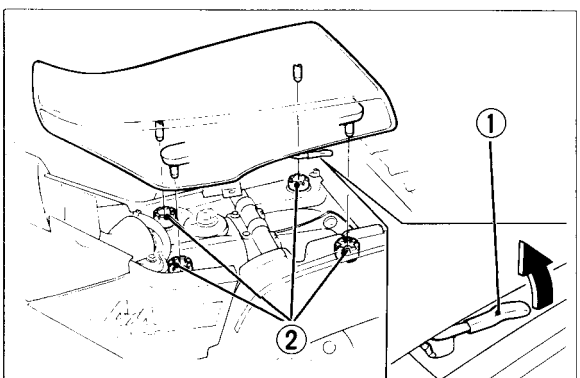

(1) Seat lock lever (2) Seat studs

Tool compartment

The tool compartment is under the seat. To take out the tool set, remove the seat and the tool holder (1) by unscrewing the wing bolt (2).

NOTE:

* The air pressure gauge should be stored in this compartment with tool set.

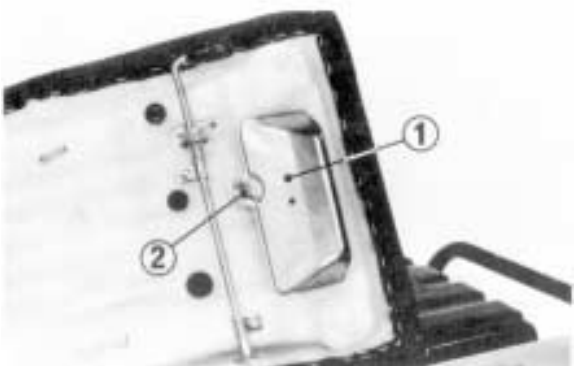

(1) Tool holder (2) Wing bolt

12V DC Power Supply

The direct current receptacle (1) is on the right side of the headlight. It provides 12V DC power at a maximum of 60 watts (5 Amps). The specified fuse is 15A.

WARNING

* *Never use a fuse with a different rating from that specified. Serious damage to the electrical system or a fire could result.*

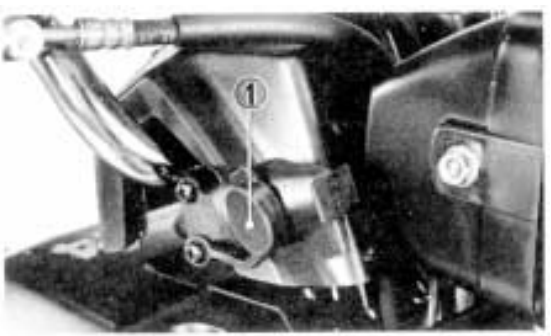

(1) Receptacle

Accessories may be connected to the receptacle by using the special plug (2) that came with your TRX.

To attach the special plug to the accessory:

1. Install the accessory leads to the plug, making sure to connect the positive and negative leads to the corresponding plug terminals.

CAUTION

* *Do not install the positive and negative accessory leads in reverse when attaching them to the special plug.*

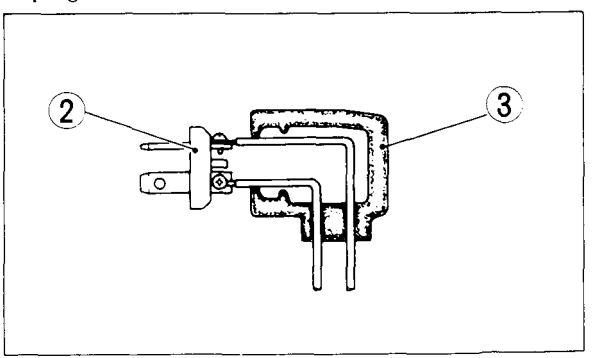

(2) Special plug (3) Plug cover

NOTE:

* We recommend that you use AWG18–AWG20 electrical wire for attachment to the special plug.

2. With the ignition OFF, insert the plug into the plug receptacle, being careful not to twist the electrical leads coming from the accessory.

WARNING

* ***Make sure the ignition switch is OFF when inserting or removing the special plug.***

CAUTION

* *Keep the electrical leads insulated and away from hot engine parts and sharp edges.*
* *Do not use accessories not designed for 12V DC power.*
* *Make sure the electrical leads extend from the bottom of the plug when inserting it in the receptacle.*

3. When the receptacle is not being used, cover it with the rubber cap that came with your TRX to keep out dust, water and sand.

Fuse Replacement

The fuse box (1) containing the main, sub and spare fuses is located in the document compartment behind the seat. The main fuse is 20A whereas the sub fuses are 5A and 15A. Spare fuses (2) are provided on the fuse box and behind the fuse box cover as shown.

When frequent fuse failure occurs, it usually indicates a short circuit or an overload in the electrical system. See your authorized Honda dealer for repair.

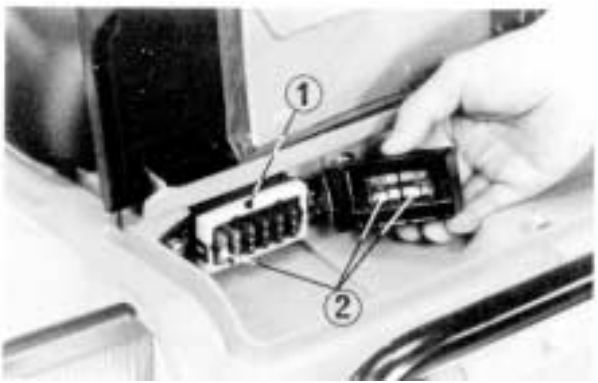

(1) Fuse box (2) Spare fuse

WARNING

* ***Never use a fuse with a different rating from that specified. Serious damage to the electrical system or a fire may result, causing a dangerous loss of lights at night or engine power.***

CAUTION

* *Turn the ignition switch OFF before checking or replacing the fuse to prevent accidental short-circuiting.*

Reverse Selector Knob

The reverse selector knob is on the rear brake/parking brake lever.

When shifting the transmission into reverse, bring the TRX to a complete stop, push the reverse selector knob in and squeeze the rear brake/parking brake lever.

The transmission will be shifted into reverse by depressing the gearshift pedal.

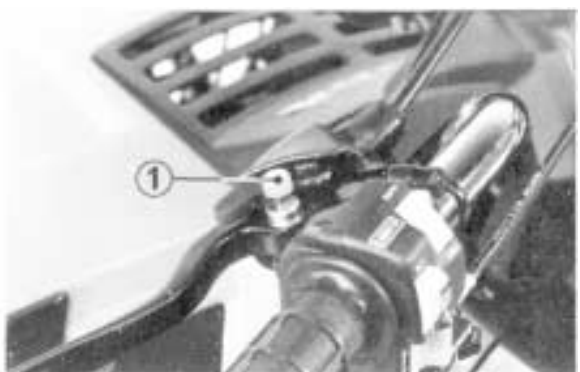

(1) Reverse selector knob

Gearshift Pedal

The gearshift pedal is near the left footpeg. One full stroke of the gearshift pedal will shift the transmission. The pedal automatically returns to the horizontal position when released. Each stroke of the pedal engages the next gear in sequence.

Raise the pedal to upshift to a higher gear and depress the pedal to downshift.

When the reverse selector knob is pushed in and the rear brake/parking brake lever is squeezed, the transmission can only be shifted from neutral to reverse gear by depressing the gearshift pedal.

CAUTION

* *Bring the TRX to a complete stop before shifting the transmission into reverse. If the transmission is shifted into reverse when the vehicle is moving, damage to the transmission will result.*

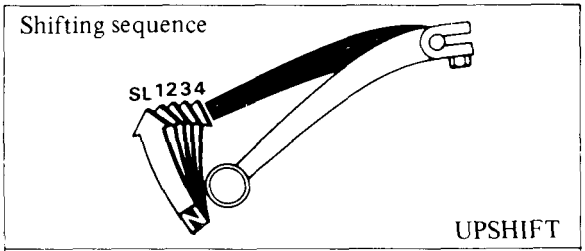

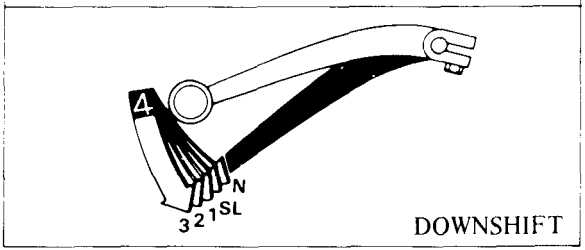

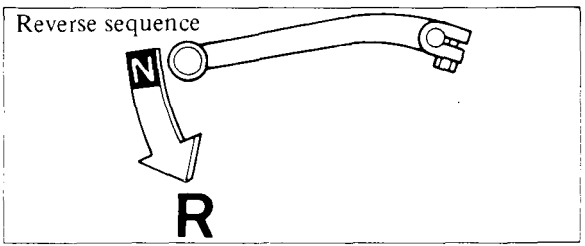

FUEL

Fuel Valve

The three way fuel valve (1) is on the right side cover near the rear fender.

OFF

With the fuel valve in the OFF position, fuel cannot flow from the tank to the carburetor. Turn the valve off whenever the TRX is not in use.

ON

With the fuel valve in the ON position, fuel will flow from the main fuel supply to the carburetor only when the engine is being started or is running.

RES

With the fuel valve in the RES position, fuel will flow from the reserve fuel supply to the carburetor. Use the reserve fuel only when the main supply is gone. Refill the tank as soon as possible after switching to RES. The reserve fuel supply is 2.0 ℓ (0.52 US gal).

NOTE:

* Do not operate the TRX with the fuel valve in the RES position after refueling. You may run out of fuel with no reserve.
* Be sure to turn the fuel valve to OFF while the vehicle is not in use.

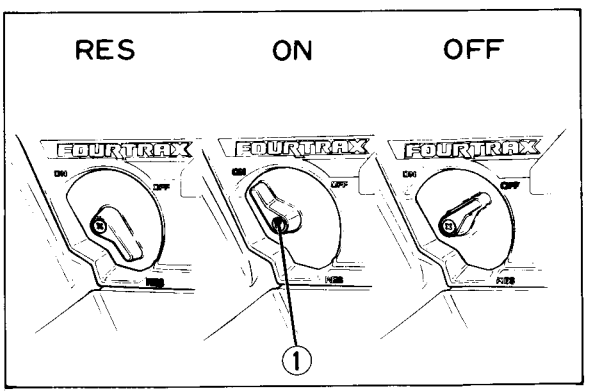

(1) Fuel valve

Fuel Tank

The fuel tank is located under the seat. To fill the fuel tank, remove the seat. Fuel tank capacity is 10.5 ℓ (2.78 US gal) including 2.0 ℓ (0.52 US gal) in the reserve supply.

To remove the fuel tank cap (1), turn the lever (2) clockwise.

Automotive gasoline with a pump octane number ($\frac{R+M}{2}$) of 86 or higher, or research octane number of 91 or higher may be used.

FOR NEW SOUTH WALES ONLY:
Use unleaded fuel with a research octane number of 91 or higher.

If knocking or pinging occurs, try a different brand of gasoline or a higher octane grade.

CAUTION:

* Should knocking or pinging pesist while holding a steady speed on a level road, try changing brands of gasoline. If knocking or pinging still persists, consult your Honda dealer.

With the "△" mark on the cap facing the front, press down on the base (3) of the cap until locks.

NOTE:

* Check that the breather tube (4) is connected securely.
* Make sure that the lever (2) on the cap aligns with the "△" mark on the cap.

WARNING

* ***Gasoline is extremely flammable and is explosive under certain conditions. Refuel in a well-ventilated area with the engine stopped. Do not smoke or allow open flames or sparks in the area where the vehicle is refueled or where gasoline is stored.***

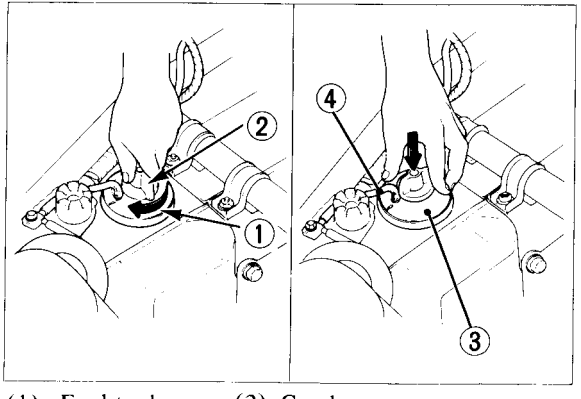

(1) Fuel tank cap (2) Cap lever

* *Do not overfill the tank (there should be no fuel in the filler neck (5)). After refueling, make sure the tank cap is closed securely.*
* *Avoid repeated or prolonged contact with skin or breathing of vapor. KEEP OUT OF REACH OF CHILDREN.*

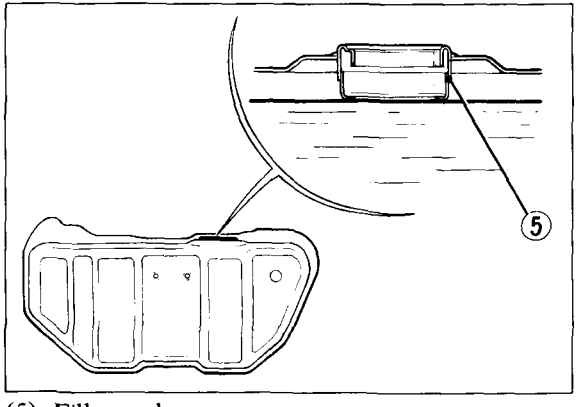

(5) Filler neck

Gasolines Containing Alcohol

If you decide to use a gasoline containing alcohol ("gasohol"), be sure its octane rating is at least as high as that recommended. There are two types of "gasohol": that containing ethanol, and that containing methanol. Do not use gasohol that contains more than 10% ethanol. Do not use gasoline containing methanol (methyl or wood alcohol) that does not also contain cosolvents and corrosion inhibitors for methanol. Never use gasoline containing more than 5% methanol, even if it has cosolvents and corrosion inhibitors.

NOTE:

* Fuel system damage or vehicle performance problems resulting from the use of such fuels is not covered under new ATV Warranties. Honda cannot endorse the use of fuels containing methanol since evidence of their suitability is as yet incomplete.
* Before purchasing fuel from an unfamiliar station, try to confirm whether the fuel contains alcohol, and to what percentage. If you notice any undesirable operating symptoms after using a gasoline that contains alcohol; or one that you think contains alcohol, switch to a higher octane gasoline as recommended.

ENGINE OIL

Engine Oil Recommendation

USE HONDA 4-STROKE OIL OR AN EQUIVALENT.

Use only high detergent, premium quality motor oil certified to meet or exceed US automobile manufacturers' requirements for Service Classification SE or SF.

Motor oils intended for Service SE or SF will show this designation on the container. The use of special oil additives is unnecessary and will only increase operating expenses.

CAUTION:

* *Engine oil is a major factor affecting the performance and service life of the engine. Non-detergent, vegetable, or castor based racing oils, are not recommended.*
* *Do not use oils with graphite or molybdenum additives: they will adversely affect clutch operation.*

Recommended Oil Viscosity:
SAE 10W-40

Other viscosities shown in the chart below may be used when the average temperature in your riding area is within the indicated range.

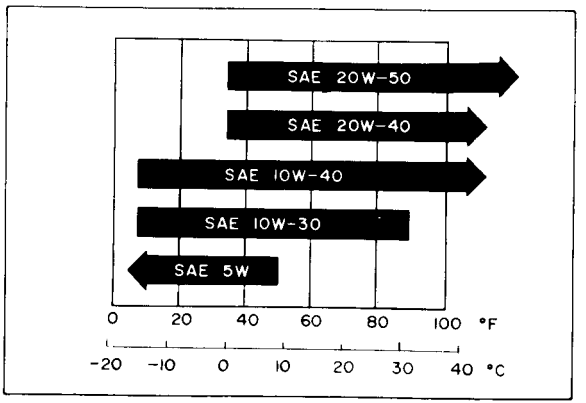

Engine Oil Level Check

Check the engine oil level each day before operating the TRX.

The oil filler cap/dipstick (1) is on the right crankcase cover and contains a dipstick for measuring the oil level. The oil level must be maintained between the upper (2) and lower (3) level marks on the dipstick.

1. With the TRX on level ground, let the engine run at idle for 2-3 minutes. With the engine stopped, remove the oil filler cap/dipstick and wipe it clean.
2. Reinsert the dipstick without screwing it in. Remove the oil filler cap/dipstick again and check the oil level.
3. If required, add the specified oil up to the upper level mark. Do not overfill.
4. Reinstall the oil filler cap/dipstick.

CAUTION:

* *Running the engine with insufficient oil can cause serious engine damage.*

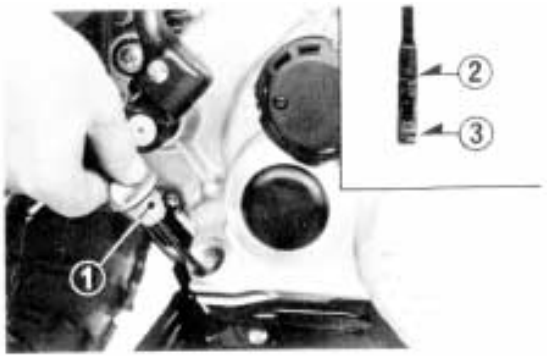

(1) Oil filler cap/dipstick (3) Lower level mark
(2) Upper level mark

TIRES

Although the tires are deisgned specifically for vigorous offroad use, they are not immune to punctures. Always select your riding area with care.

WARNING

* ***The TRX is not designed to be driven on paved surfaces. Handling and control will be severely affected.***
* ***This TRX is a 4-wheel drive model. Use of different sizes of tires or uneven tire pressure will adversely affect the stability and control of the vehicle.***

Check the tire pressure frequently with the air pressure gauge supplied with the TRX.

For normal use, the tires should be inflated to the recommended pressure. A manually operated tire pump should be used rather than the high pressure systems found in service stations. This will minimize the possibility of tire damage from overinflation.

NOTE:

* Tire pressure should be checked when the tires are "cold," before you ride.
* Check tire pressure before you ride.

TIRE SIZE		24 x 9.00-11
STANDARD TIRE BRAND	FRONT	OHTSU A/T 502
	REAR	
RECOMMENDED PRESSURE		2.2 psi (15 kPa, 0.15 kg/cm²)
MAX. PRESSURE		2.6 psi (18 kPa, 0.18 kg/cm²)
MIN. PRESSURE		1.8 psi (12 kPa, 0.12 kg/cm²)
At loaded		2.2-3.1 psi (15-21 kPa, 0.15-0.21 kg/cm²)

WARNING

* ***Maintain proper tire air pressure. Improperly inflated tires may adversely afftect maneuverability and may cause loss of control.***
* ***When replacing tires use only the size, type and brand identified in the chart. The use of different sizes or types of tire can severely effect vehicle handling.***

If you have a flat tire, use the plug method to make temporary repairs. The plug method is the same as that for conventional tubeless tires. A plug type repair kit, which is available at most auto part stores or service stations, provides a plug, an installation tool, tire cement, and an instruction sheet. Follow the instructions provided in the repair kit to make a temporary repair until the tire can be permanently repaired by the cold patch method. Any tire which cannot be repaired by the plug method should be replaced.

Whenever the TRX is to be operated far from service facilities or available transportation, we recommend that the rider carry a tire pump and a suitable repair kit with the TRX.

Tire Tread Condition

Measure the groove depth (1) of tires at the center as shown. Operating the vehicle with excessively worn tires will decrease traction and cause skidding.

WARNING

* ***Replace tires before tread depth at the center of the tires reaches the following limit.***

Minimum tread depth
4 mm (0.16 in)

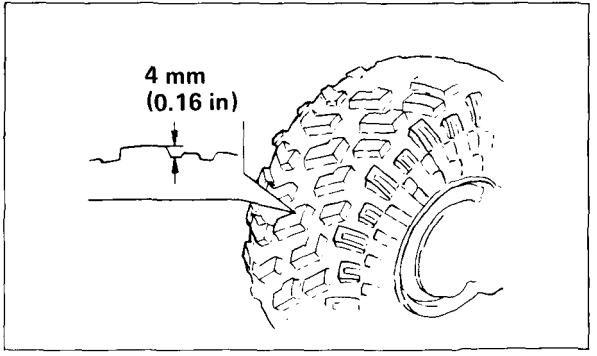

BATTERY

It is not necessary to check battery electrolyte level or add distilled water as the battery is a sealed type. If any loss of electrolyte is experienced or if your battery seems to be weak, causing slow starting or other electrical troubles, see your authorized Honda dealer.

CAUTION

* *Do not attempt to remove the caps from the cells.*
* *When the TRX is to be stored for an extended period of time, remove the battery from the vehicle and charge it fully. Then store it in a cool, dry place. If the battery is to be left on the vehicle, disconnect the negative cable from the battery terminal.*

WARNING

* *Keep away from open flames or sparks when handling a battery.*

REAR SHOCK ABSORBER

The rear shock absorber (1) have five adjustment positions for different load or riding conditions. Position II is standard.
Position I is for light loads and smooth road conditions. Positions III to V increase spring preload for a suspension, and can be used when the TRX is heavily loaded. Select the position best suited to your rear load and riding condition.

NOTE: The shock absorbers should be adjusted equally on both sides.

Adjustment Position	Rear Load
III	0 ~ 20 kg (0 ~ 44 lbs)
IV	20 ~ 40 kg (44 ~ 88 lbs)
V	40 ~ 60 kg (88 ~ 133 lbs)

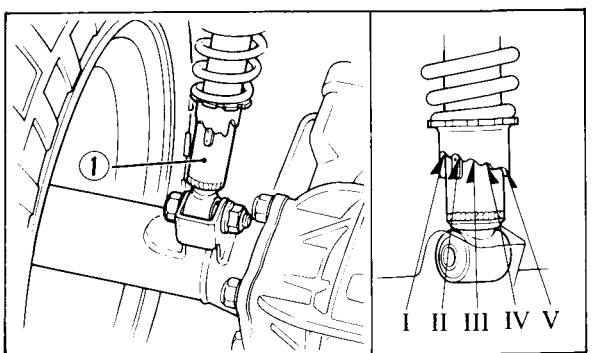

(1) Rear shock absorber

PRE-RIDE INSPECTION

WARNING

* *Failure to conduct the listed maintenance checks and adjustments may lead to equipment failure that could cause an accident.*

Inspect your TRX every day before you ride it. The items listed here will only take a few minutes to check and in the long run can save time, expense, and possibly your life.

1. Engine oil level – if required, add engine oil (page 24). Check for leaks.
2. Fuel level – fill the fuel tank when necessary (page 25). Check for leaks.
3. Brakes – check operation; make sure there is no brake fluid leakage. If necessary, adjust free play (page 65).
4. Tires – check condition and pressure (page 26).
5. Throttle – check for smooth opening and closing in all steering positions (page 51).
6. Headlight and headlight dimmer switch – check for proper function (page 11).
7. Engine stop switch – check for proper function (page 10).
8. Front differential/final drive – check oil levels (page 64).
9. Nuts, Bolts, Fasteners – check the wheels to be that the axle nuts are tightened and secured by cotter pins. Check the security of all other nuts, bolts and fasteners.
10. Steering – check taht the wheels turn properly as you steer the handlebars.
11. Check that all cargo is properly secured.

Correct any discrepancy before you ride. Contact you authorized Honda dealer for assistance if you cannot correct the problem.

STARTING THE ENGINE

WARNING

* *Never run the engine in a closed area. The exhaust contains poisonous carbon monoxide gas that may cause loss of consciousness and lead to death.*
* *Do not try to start the engine with the transmission in gear. You may injure yourself or damage the vehicle.*

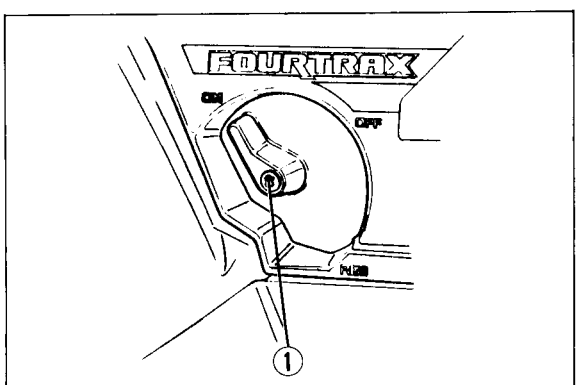

(1) Fuel valve

Preparation

1. Select a level surface and lock the parking brake (page 14) before starting the engine.
2. Turn the fuel valve (1) to ON.
3. Make sure the engine stop switch (2) is at RUN.

(2) Engine stop switch

Starting Procedure (after Preparation)

To restart a warm engine, follow the procedure for High Air Temperature.

Normal Air Temperature

10°–35°C (50°–95°F)

1. While pushing the choke lever (4) in, move it all the way to "Fully Open (A)".
2. Turn the ignition switch (5) to ON. Make sure that the transmission is in the neutral by checking the neutral indicator lamp (6).
3. Press the starter button (7) or operate the kick starter and start the engine.

NOTE:

* Do not use the electric starter for more than 5 seconds at a time. Release the starter button for approximately 10 seconds before pressing it again.
* To prevent a weak or discharged battery, use the kickstarter if you encounter any difficulty in cranking the engine with the starter or motor.
* The starter motor will operate only when the transmission is in neutral.
* This vehicle is equipped with an electric fuel pump which will not operate properly when battery voltage is less than 5V. When battery voltage is less than 5V, remove the battery and change it.

4. Immediately after the engine starts, release the starter button and set the choke lever to "detent position (B)".
5. About a half minute after the engine starts, move the choke lever all the way to "Fully Closed (C)".
6. If idling is unstable, open the throttle slightly.

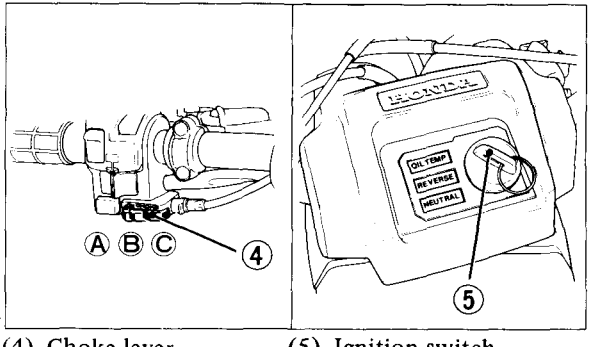

(4) Choke lever (5) Ignition switch

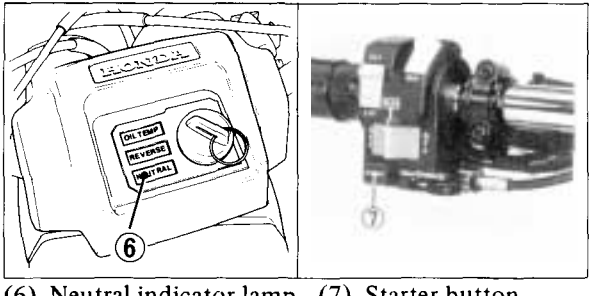

(6) Neutral indicator lamp (7) Starter button

High Air Temperature

35°C (95°F) or above

1. Do not use the choke.
2. Open the throttle slightly.
3. Start the engine by pressing the starter button or operating the kickstarter.

Low Air Temperature

10°C (50°F) or below

1. Follow steps 1–4 under Normal Air Temperature.
2. Warm up the engine by opening and closing the throttle slightly.
3. Continue warming up the engine until it will idle smoothly with the choke lever moved to "Fully Closed (C)"

CAUTION

* *Extended use of the choke may impair piston and cylinder wall lubrication.*
* *Do not race the engine during the warm-up period. Racing a cold engine wastes fuel and increases engine wear.*

Kickstarting

Remove the right side cover and operate the kick starter to start the engine. Starting from the top of the stroke, kick through to the bottom with a rapid, continuous motion.

CAUTION:

* *Do not allow the kickstarter to snap back freely against the pedal stop as engine case damage could result.*

NOTE:

* Since the engine decompression system is interlocked with the kickstarter, a quick, vigorous kick from the top of the stroke is most effective.

(1) Kick starter pedal

Flooded Engine

If the engine does not start after several attempts, it may have become flooded with excess fuel. To clear the engine, turn the engine stop switch OFF, move the choke lever all the way to the right, hold the throttle fully open, and briefly press the starter button or crank the engine several times with kick-starter.

When the engine is cleared, wait 10 seconds then turn the ignition switch ON and repeat the normal starting procedure, but do not use the choke.

BREAK-IN

During the first few days of riding, operate your new TRX so that the engine neigher pulls laboriously nor approaches maximum rpm in any gear. Avoid full throttle operation, and shift gears frequently to vary engine speed. Careful break-in during the initial operating period will measurably extend the service life of the engine.

RIDING

WARNING

* ***Review TRX Safety (pages 1–5) before you ride.***
* ***Avoid "wheelies" and jumping as they may cause loss of control.***
* ***Ride with your feet on the footpegs at all times. If your feet are removed from the footpegs and touch the ground while the TRX is moving, they may come in contact with the rear wheels.***
* ***The TRX is not designed to be ridden on paved surfaces. Handling and control will be severely affected.***
* ***When braking, remember that use of either the left or right brake lever, or the brake pedal, brakes the front and rear wheels. This may cause the vehicle to pitch over if the brakes are applied abruptly on a very steep slope.***
* ***While carrying loads or pulling a trailer, use extreme caution when starting, stopping or turning the TRX.***

Under normal riding conditions it is not necessary or desirable to touch the ground for balance.

For your initial riding practice, select a safe area free of obstacles with a level surface of dirt, sand or snow, etc.

1. Make sure the transmission is in neutral and set the parking brake.
2. After the engine has been warmed up, release the parking brake. The TRX is ready for riding.
3. While the engine is idling, depress the gearshift pedal to shift into SL (Super-low) gear.
4. Increase engine speed by gradually opening the throttle.

5. When your speed increases, close the throttle and shift to 2nd gear by raising the gearshift pedal.

CAUTION

* *Do not shift gears without closing the throttle. The engine and drive train could be damaged by overspeed and shock.*

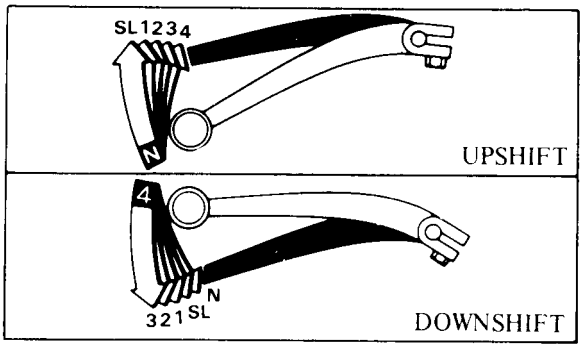

Shifting sequence

6. This sequence is repeated to progressively shift to 3rd and 4th (top) gear.

CAUTION

* *Do not tow the TRX or coast for long distances while the engine is off. The transmission will not be properly lubricated and damage may result.*

Reverse Riding

For reverse riding practice, make sure there are no obstacles or people in the area.

1. Make sure the transmission is in neutral and set the parking brake.
2. Start the engine and release the parking brake.
3. While the engine is idling, press the reverse selector knob, squeeze the rear brake/parking brake lever and depress the gearshift pedal into the reverse gear.
4. Release the rear brake/parking brake lever.
5. Ride the TRX cautiously in reverse by gradually opening the throttle.

WARNING

* ***When backing up, open the throttle carefully to ride slowly and safely, being careful that there are no obstacles or people behind you.***
* ***Avoid sudden application of the throttle or abrupt turns.***
* ***Close the throttle and apply the brakes carefully to stop the TRX when riding in reverse. Don't apply the left or right brake lever, or the brake pedal, abruptly because this may cause the front wheel to lift off the ground. Remember the right hand brake lever brakes the rear wheels also.***
* ***Make sure the neutral indicator light comes on after shifting the transmission from reverse into neutral. If the neutral indicator light does not come on, move the TRX and then try to shift the transmission into neutral again.***

Turning Maneuvers

For better traction in off-road use, the TRX has been fitted with a rear axle which drives both rear wheels equaly at all times.

When negotiating a turn, the wheels on the outside of the turn must travel a wider radius and the inside wheels must slip a little relative to the ground. To permit the inside wheels to have less tradition, the rider must slightly shift their weight to the outside wheels. So, it may not be enough to merely steer the TRX into a turn. The new rider must learn to shift his or her weight and control the throttle to help the vehicle to negotiate the turn.

This is an important technique to be mastered in riding the Honda TRX. For your initial riding practice, operate the TRX in low gear. Practice turning the TRX at slow, constant speeds. Defer higher speeds until you are confident of your proficiency.

To turn, steer in the direction of the turn, leaning your body to the inside of the turn, while supporting your weight on the outer footpeg. Use the throttle to maintain power throughout the turn.

This technique allows the TRX to lean slightly toward the outside, altering the balance of traction between the inside and outside wheels sufficiently to allow them to negotiate the turn.

Once this technique is learned, turning maneuvers can be performed within a relatively small area.

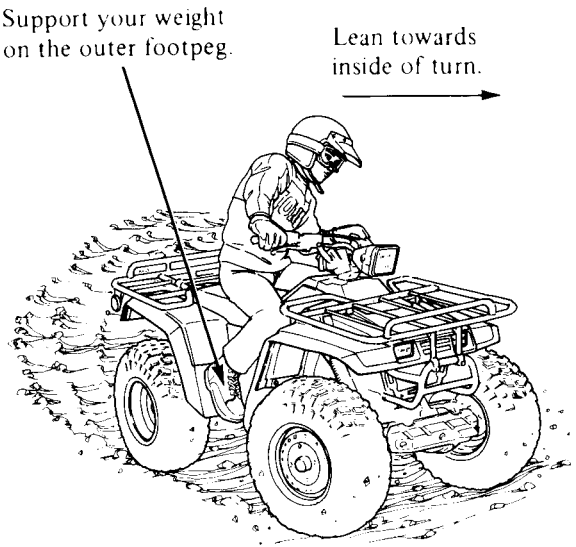

Incorrect turning techniques may cause the front wheels to slide straight ahead when steered without **affecting the TRX's direction of travel. If this should occur, close the throttle and come to a stop. Then continue practicing the technique outlined on the preceding page.**

If the front wheels tend to skid in mud or snow, you may be able to improve control under these conditions by leaning forward, transferring additional weight to the front wheels.

If the rear wheels inadvertently skid sideways, correct your slide by steering in the direction of the skid if you have room to perform this maneuver safely. Avoid braking or accelerating until you have regained directional control.

To avoid skids while traveling on slippery terrain, the rider must exercise a high degree of caution. Surfaces with extremely low or extremely high coefficients of friction may cause skidding problems. It is dangerous to skid on ice, because you may lose all directional control, and it is dangerous to skid on pavement, because you may regain traction suddenly and unexpectedly, which can cause you to lose your balance and overturn.

Climbing Hills

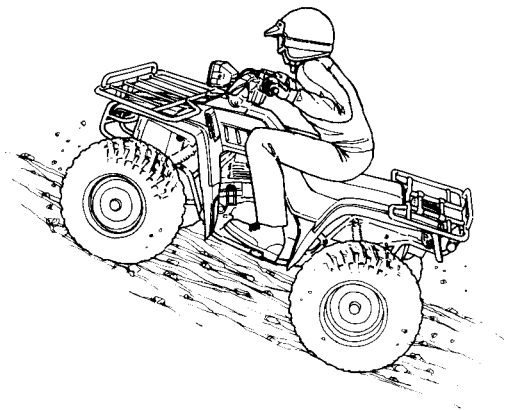

Practice climbing on evenly surfaced slopes of less than 20 degrees. The TRX's capability in climbing hills or traversing any specific terrain is dependent upon rider skill. As you gain experience in handling the TRX and learn the hazards to be encountered and your own limitations, you may then proceed to ride more challenging terrain. However, you must first be able to discern and avoid any hill of hazard that would cause the TRX to overturn.

The riding technique for hill climbing involves transferring your weight toward the front wheel to keep it in contact with the ground. This may be done by leaning forward, or for greater weight transference, by standing on the footpegs and leaning forward.

Take a running start, in the appropriate gear and speed for the ascent, and climb at a steady rate of speed.

WARNING

* ***Do not apply power suddenly by opening the throttle or changing gears while ascending a hill, or the front wheels may rise from the ground. If the front wheels lift, rider control will be lessened and the TRX may overturn backward.***

If you should find that you have incorrectly estimated climbing capability and lack the power or traction to continue the ascent, then turn the TRX around if space permits, while you still have the forward speed to do so and descend. Avoid stalling part way up a hill, as maneuvering will then become much more difficult.

WARNING

* ***Before attempting a turn on a hillside, the rider should first master turning techniques on level ground.***

If you do lose all forward speed and can neither continue uphill nor maneuver the TRX under its own power, stop the TRX, apply the parking brake and assess the situation. Dismount and physically turn the machine around from the uphill side. If necessary, have someone help you turn the vehicle around. If it cannot be turned and must be backed down, first shift the transmission into reverse. Always go very slowly and under control when backing down a steep hill. Do not let the vehicle roll backwards freely. Again, we strongly recommend that the rider turn the TRX around rather than back it downhill.

WARNING

* ***To avoid overturning, the rider must be exercise a high degree of caution when dismounting or moving the TRX on a hillside.***
* ***Applying the front or rear brakes or engaging the transmission while rolling backward downhill can easily cause the TRX to overturn and fall on the rider, so speed must be controlled with great caution.***

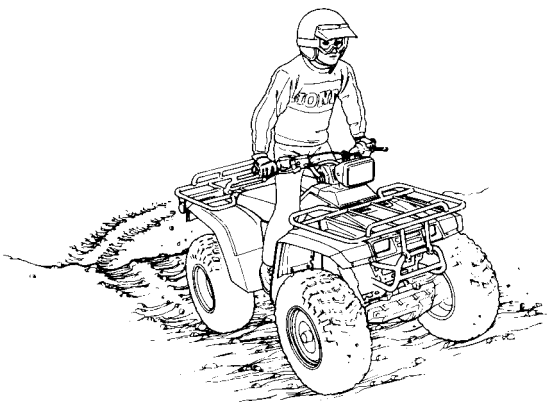

WARNING

Adding cargo or towing a trailer will greatly reduce your ability to climb hills or turn around on a hill, safely. Be sure to load the cargo in the middle of the racks, and toward the center of the vehicle, and use caution.

Descending Hills

It is usually advisable to descend hills with the TRX pointed directly downhill, avoiding angles that would cause the vehicle to lean sharply to one side. As you approach the point of descent, stop and survey the terrain below. Never ride headlong past your limit of visibility. When you have picked a safe path of descent, shift the transmission into low gear and descend slowly with the throttle closed. Sit back on the seat, with arms extended and braced on the handlebars.

When descending sand dunes, you should apply the brake intermittently to further reduce forward speed. Braking effectiveness is, of course, reduced while descending any incline with a loose surface.

WARNING

Do not reduce power suddenly by closing the throttle or downshifting while descending a hill, or the rear wheels may rise off the ground. If the rear sheels lift, the vehicle may turn or pitch over, out of control.

Use caution when applying the rear brake going downhill. Four wheel drive interconnects all wheels, so applying the left hand brake lever or brake pedal will brakes the front wheels.

WARNING

Adding cargo or towing a trailer will greatly reduce your ability to descend hills safely. Be sure to load the cargo in the middle of the racks, and toward the center of the vehicle.

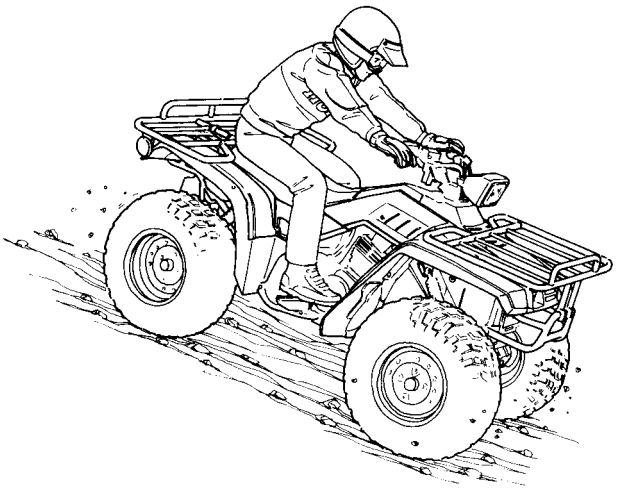

Traversing Slopes

When riding across a slope at right angles to the incline of the hill, lean your body uphill to maintain balance and stability. On a loose surface such as sand, it may become necessary to steer slightly uphill and add power in order to maintain your course of travel.

WARNING

* ***Balance is more precarious while the TRX is tilted to one side. Avoid traversing slopes where there is slippery or difficult terrain.***
* ***Adding cargo will greatly reduce your ability to traverse slopes safely. Do not traverse slopes when towing a trailer.***

Riding Through Water

WARNING

* *Do not ford any stream with fast flowing water. The tires may float, making it difficult to maintain control.*
* ***Do not ride the TRX through water beyond its limit.***

The Honda TRX can ford water to a depth of approximately 11 inches, although the rider must be careful to avoid getting the spark plug or air cleaner wet.

When crossing streams, choose a course where both banks have gradual inclines. Proceed at a slow, steady speed, and take care to avoid submerged obstacles and slippery rocks.

After riding through water, the brakes may be less effective than normal. Test the front and rear brakes after traveling through any water, and if necessary, apply the brakes repeatedly until the heat of friction has dried them, and the brakes regain their normal effectiveness.

If they do not dry out and regain their effectiveness, stop the TRX and shut the engine OFF. Set the parking brake ON and drain any trapped water by removing the drain bolt (1) from the bottom of the rear brake cover.

CAUTION:

* *If any water drains, it is an indication that the rear brake seals must be replaced. Have these seals checked by your Honda dealer as soon as possible.*

(1) Drain bolt

Mud may have found its way into the front brakes after riding through muddy water. Remove the front brake adjust hole cap from the front wheel rim and flush with clean water thoroughly as soon as possible.

(1) Front brake adjust hole cap

High Altitude Riding

When operating this vehicle at high altitudes, the air-fuel mixture becomes overly rich. Above 6,000 feet (1,800 m) driveability and performance may be reduced and fuel consumption increased. The carburetor can be modified to compensate for this high altitude richness. However, the carburetor must be returned to standard factory specifications when lower altitude riding is desired. (See page 61.)

CAUTION:

* *Sustained operation at altitudes below 5,000 feet (1,500 m) with high altitude carburetor modifications may cause engine overheating and damage.*
* *Tire pressures can change significantly as you go up and down in a attitude; therefore, always check tire pressures just before you start riding.*

PARKING

1. Stop the vehicle, shift the transmission into neutral, turn the fuel valve and ignition switch OFF.
2. Pull the parking brake lever and lock it. (See page 14.)

WARNING

* ***Do not park on an incline. If you must park on a hill, place the TRX across the incline so that it neither faces downhill nor uphill.***

MAINTENANCE SCHEDULE

Perform the Pre-ride Inspection (Page 30) at each scheduled maintenance period.

I: Inspect and Clean, Adjust, Lubricate or Replace if necessary. C: Clean R: Replace A: Adjust L: Lubricate		EVERY	INITIAL SERVICE PERIOD (First week of operation)	REGULAR SERVICE PERIOD (Every 30 operating days)	Refer to page
*	FUEL LINE	YEAR I			50
*	FUEL FILTER	6 MONTH R			50
*	THROTTLE OPERATION		I	I	51
*	CARBURETOR CHOKE			I	52
	AIR CLEANER	(NOTE 1)		C	52
	SPARK PLUG			I	54
*	VALVE CLEARANCE		I	I	55–58
	ENGINE OIL		R	R	59
	ENGINE OIL FILTER		R	R	59
*	CARBURETOR IDLE SPEED		I	I	60
	FINAL DRIVE OIL	YEAR I, 2 YEARS R			64
	BRAKE FLUID	2 YEARS R		I	65

I: Inspect and Clean, Adjust, Lubricate or Replace if necessary. C: Clean R: Replace A: Adjust L: Lubricate		EVERY	INITIAL SERVICE PERIOD (First week of operation)	REGULAR SERVICE PERIOD (Every 30 operating days)	Refer to page
*	BRAKE SHOE WEAR	YEAR I (NOTE 2)			65, 66
	BRAKE SYSTEM		I	I	65–69
*	REVERSE LOCK SYSTEM		I	I	–
*	CLUTCH SYSTEM		I	I	70
	SKID PLATE, GUARD PLATE			I	71
*	SUSPENSION			I, L	–
*	NUT, BOLT, FASTENER		I	I	–
**	WHEEL		I	I	–
**	STEERING SHAFT HOLDER BEARING	YEAR I			–
**	STEERING SYSTEM	YEAR I			–

* SHOULD BE SERVICED BY AN AUTHORIZED HONDA DEALER. UNLESS THE OWNER HAS PROPER TOOLS AND SERVICE DATA AND IS MECHANICALLY QUALIFIED. REFER TO THE OFFICIAL HONDA SERVICE MANUAL.

** IN THE INTEREST OF SAFETY, WE RECOMMEND THESE ITEMS BE SERVICED ONLY BY AN AUTHORIZED HONDA DEALER.

NOTES:
1. Service more frequently when riding in dusty areas, sand or snow.
2. Service more frequently after riding in very wet or muddy conditions.

WARNING

* *Always turn the engine off before performing any maintenance operations unless otherwise stated.*
* *To maintain the safety and reliability of your* ***HONDA TRX do not modify it and use only new genuine HONDA parts or their equivalent when servicing or repairing.***
  The use of replacement parts which are not of equivalent quality may impair the operation of ***your TRX.***

TOOL KIT

The tool kit is stored in the compartment under the seat. The tools provided are sufficient to perform routine maintenance and simple repairs. Any extensive work requiring additional tools should be performed by an authorized Honda motorcycle dealer. Listed below are the items included in the tool kit:

- Screw driver blade
- Handle for screw driver
- 10 x 12 mmm open end wrench
- 14 x 17 mm open end wrench
- Pliers
- 17 mm box wrench/plug wrench
- Handle with 8 mm open end wrench
- 10 mm box wrench
- Air pressure gauge
- Soccer lever
- Tool bag

FUEL FILTER

The fuel filter (1) is under the rear fender. A cartridge type filter using a paper element is utilized to prevent dirt from entering the carburetor passage. The filter must be replaced periodically, or the fuel flow will eventually be restricted.

WARNING

* ***Gasoline is extremely flammable and is explosive under certain conditions. Perform this operation in a well-ventilated area with the engine stopped. Do not smoke or allow flames or sparks in the area.***

Fuel Filter Replacement:

1. Turn the fuel valve OFF.
2. Disconnect the fuel lines (2) from the fuel filter (1). Discard the filter.
3. Connect a new filter to the fuel lines.

NOTE:

* Install the filter with the arrow (3) in the normal direction of fuel flow.
* Check the fuel lines for damage or deteriorations. Replace them if necessary.

4. Start the engine and check for leaks.

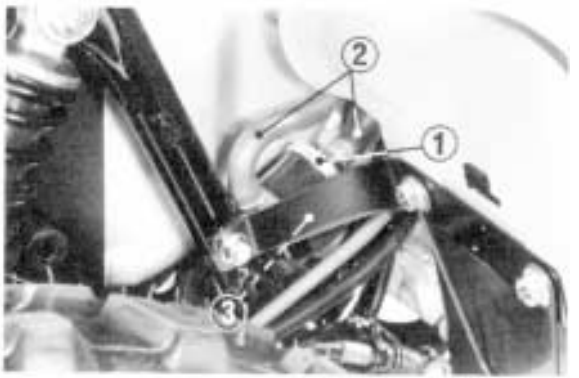

(1) Fuel filter
(2) Fuel lines
(3) Arrow mark

THROTTLE OPERATION

Inspect the throttle cable for condition and operation. Replace the cable if it has become worn or kinked. Lubricate the cable with a commercially available cable lubricant to prevent premature wear and corrosion. Free play, measured at the tip of the throttle lever (1), should be maintained at 3–8 mm (1/8–5/16 in).

The cable adjuster (3) is located near the right grip. Slide the rubber sleeve (2) back to expose the throttle cable adjuster (3). Turn the adjuster to obtain the correct free play. Reinstall the sleeve after adjustment.

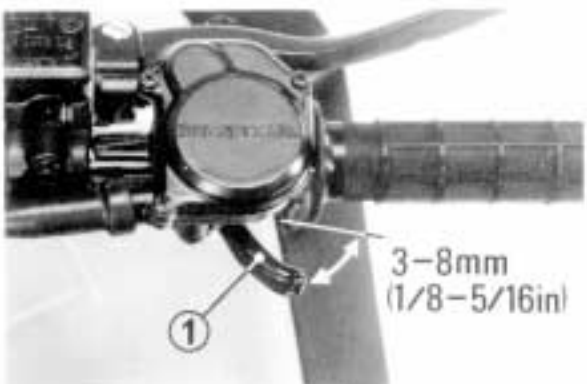

(1) Throttle lever

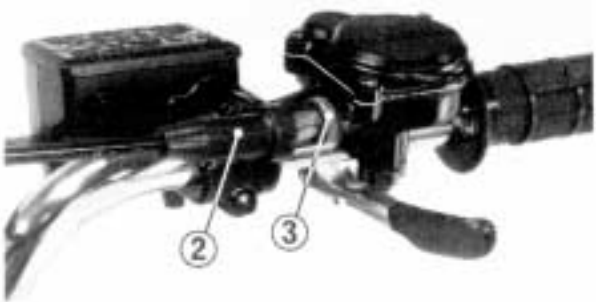

(2) Rubber sleeve
(3) Cable adjuster

CARBURETOR CHOKE

Inspect the choke cable for condition and choke lever (1) for operation. Replace the cable if it is damaged or kinked.
Lubricate the cable with commercially available cable lubricant to prevent permature wear and corrosion.

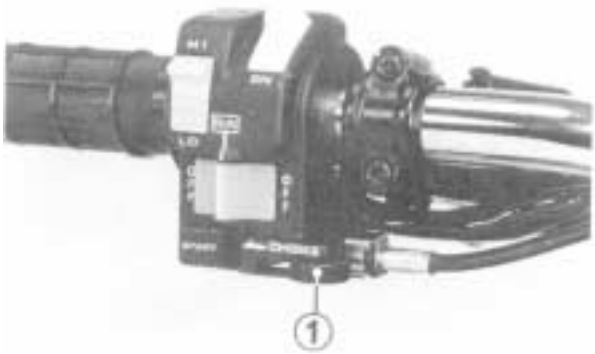

(1) Choke lever

AIR CLEANER

The air cleaner element accumulates dust and must be cleaned periodically. If the TRX is ridden in dusty areas, the element must be cleaned at more frequent intervals than specified in the MAINTENANCE SCHEDULE.

To clean the filter element:

1. Remove the seat. Remove the air cleaner case top cover (1) by removing the wing bolt (2).

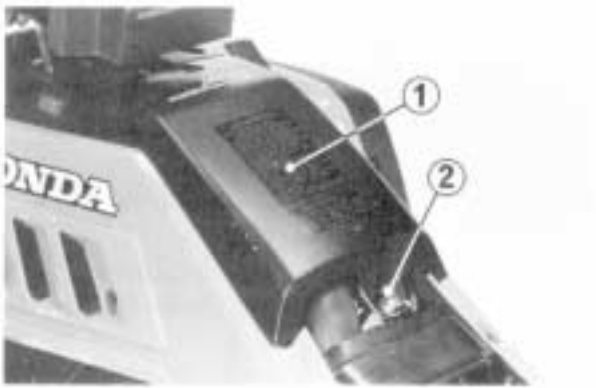

(1) Air cleaner case top cover
(2) Wing bolt

2. Remove the four retainer clips (3) attaching the air cleaner case.
3. Remove the screws (4) and remove the air cleaner assembly from the frame.
4. Remove the filter element , wash it in non-flammable or high flash point solvent and allow it to dry thoroughly.

(3) Retainer clips

WARNING

* ***Never use gasoline or low flash point solvents for cleaning the air cleaner element. A fire or explosion could result.***

5. Soak the filter element in clean gear oil (SAE 80–SAE90) until saturated, then squeeze out the excess oil.
6. Reassemble by reversing the disassembly sequence.

CAUTION:

* *Do not twist the filter element when squeezing the filter element.*

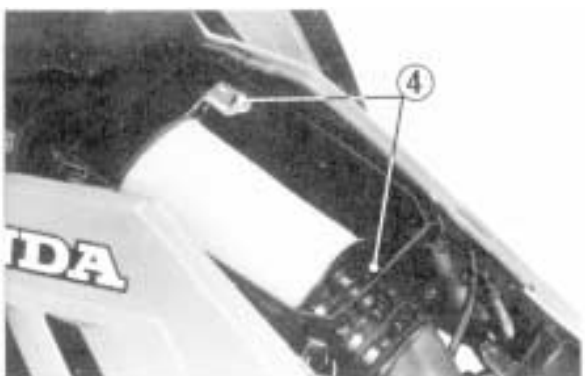

(4) Screws

SPARK PLUG

Standard spark plug

DR8ES-L (NGK) X24ESR-U (ND)

CAUTION:

* *The use of spark plugs of incorrect size or heat range can cause serious engine damage.*

1. Disconnect the spark plug cap.
2. Clean any dirt from around the spark plug base.
3. Remove the plug with the wrench provided in the tool kit.
4. Visually inspect the spark plug electrodes for wear. The center electrode should have square edges and the side electrode should not be eroded. If the electrodes and insulator tip appear unusually fouled or burned, we suggest that you contact an authorized Honda dealer for inspection of the TRX. Discard the spark plug if there is apparent wear or if the insulator is cracked or chipped.
5. Make sure that the spark plug gap is 0.6–0.7 mm (0.024–0.028 in) using a wire-type feeler gauge. If adjustment is necessary, bend the side electrode (1) carefully.
6. With the plug washer attached, thread the spark plug in by hand to prevent cross-threading.
7. Tighten a new spark plug 1/2 turn with the spark plug wrench to compress the washer. If you are reusing a plug, it should only take 1/8–1/4 turn after the plug seats.

CAUTION:

* *The spark plug must be securely tightened. An improperly tightened plug can become very hot and possibly damage the engine.*

(1) Side electrode

VALVE CLEARANCE

Valve clearance should be maintained at 0.08 mm (0.003 in). Excessive clearance will cause noise. Insufficient clearance will cause loss of power and could cause valve damage.

NOTE:

* Check and adjust valve clearances while the engine is cold. The clearance will change as the temperature rises.

(1) Side cover
(2) Air cleaner case top cover
(3) Wing bolt
(4) Mount bolts

1. Turn the fuel valve OFF and disconnect the fuel line at fuel valve.
2. Remove the seat and side covers (1). Remove the air cleaner case top cover (2) by removing the wing bolt (3).
3. Remove the front fender mount bolts (4).
4. Remove the front fender top cover (5).

(5) Front fender top cover

5. Remove the cross member plate (6).
6. Loosen the band screws (7) and remove the connecting tube (8) by removing the bolt (9).
7. Loosen the band screws (10) and remove the air cleaner case (11) by removing the bolts (12).
8. Remove the three engine mount bolts (13) and mount plates (14).
9. Remove the valve adjusting hole covers (15).

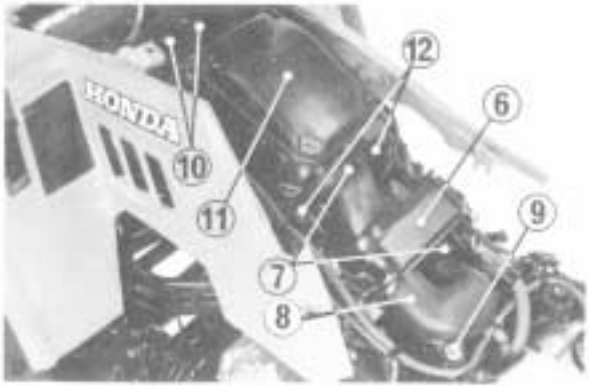

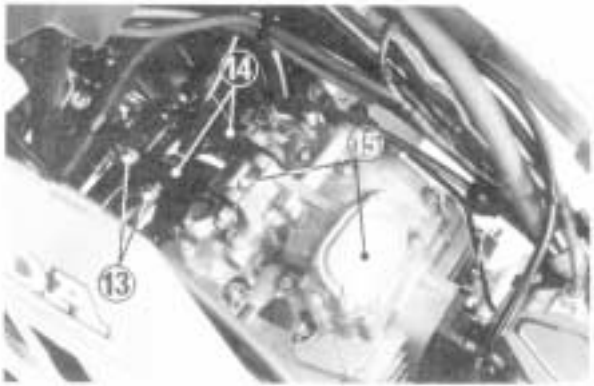

(6) Cross member plate
(7) Band screws
(8) Connecting tube
(9) Bolt
(10) Band screws
(11) Air cleaner case
(12) Bolts
(13) Engine mount bolts
(14) Mount plates
(15) Valve adjusting hole covers

10. Remove the crankshaft hole cap and timing mark hole cap from the alternator cover.
11. Rotate the crankshaft (16) clockwise until the T mark (17) on the alternator rotor lines up with the timing index mark (18) on the cover. In this position, the piston may either be on the compression or the exhaust stroke. The adjustment must be made when the piston is on top of the compression stroke and both the intake and exhaust valves are closed.
    This can be determined by moving the rocker arms by hand. If they are free, it is an indication that the valves are closed and that the piston is on the compression stroke. If they are tight and the valves are open, rotate the crankshaft 360° (one complete revolution) and realign the T mark to the timing index mark.
12. Check the clearance of both valves by inserting a 0.08 mm (0.003 in) feeler gauge (19) between the adjusting screws and valve stem.
13. If adjustment is necessary, loosen the adjusting screw lock nut (20) and turn the screw (21) so that there is a slight resistance when the feeler gauge (19) is inserted.

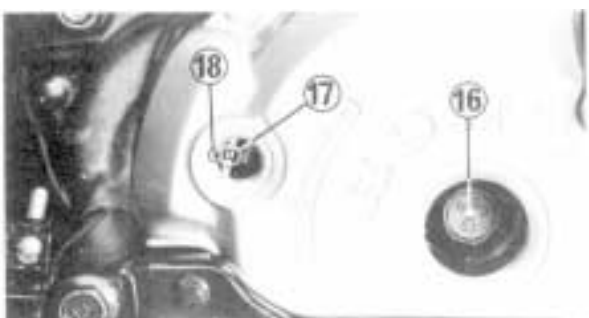

(16) Crankshaft
(17) T mark
(18) Index mark

(19) Feeler gauge
(20) Lock nut
(21) Adjusting screw

14. After adjustment, tighten the lock nut while holding the adjusting screw to prevent it from turning.
15. Recheck the clearance to make sure that it has not changed.
16. Reinstall the removed parts.

NOTE:

* Tighten the upper engine mount bolts to the specified torque.
  10 mm bolt: 70–80 N·m (7.0–8.0 kg m, 51–58 ft·lb)
  8 mm bolt: 34–40 N·m (3.4–4.0 kg-m, 25–29 ft·lb)
* Install the air cleaner inlet duct (22) on the front fender (23) securely.

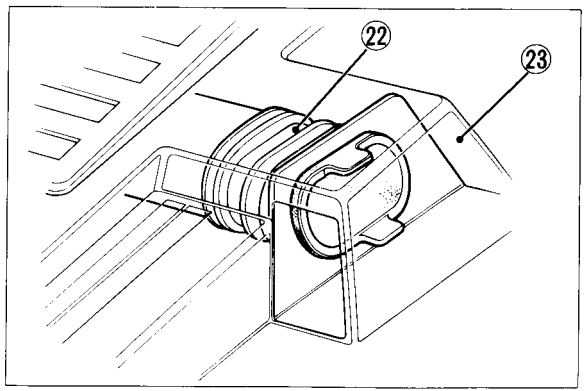

(22) Inlet duct (23) Front fender

ENGINE OIL AND FILTER

Engine oil should be changed in accordance with the maintenance schedule. Use motor oils of the grade and viscosity recommended on Page 24.
When changing oil, drain the oil from the crankcase while the engine is still warm. This will ensure complete and rapid draining.

1. With the TRX on level ground, remove the oil filler cap from the right crankcase cover.
2. Place an oil drain pan under the crankcase and remove the oil drain plug (1).
3. Remove the oil filter cover (2) by removing the screws. Let the remaining oil drain out. Discard the oil filter (3).
4. Check that the oil filter cover O-rings (4) are in good condition and then install the new oil filter with the rubber on oil filter facing out and install the cover using the screws. Tighten the screws securely.
5. Fill the crankcase with approximately 2.3 liters (2.4 US qt) of the recommended oil.
6. Install the oil filler cap.
7. Start the engine and let it idle for 2–3 minutes.
8. Stop the engine and make sure that oil level is between the upper and lower marks on the dipstick. If necessary, add more oil but do not overfill.

(1) Oil drain plug

CAUTION

* *Running the engine with improper oil level can cause serious engine damage.*

(2) Oil filter cover
(3) Oil filter
(4) O-rings

CARBURETOR

The engine must be warm for accurate idle adjustment. Ten minutes of stop-and-go riding is sufficient.

NOTE:

* Do not attempt to compensate for faults in other systems by carburetor adjustment. See your authorized Honda dealer for regularly scheduled carburetor adjustments.

1. Warm up the engine.
2. Adjust idle speed with the throttle stop screw (1).
   IDLE SPEED: 1,400 ± 100 rpm
3. To adjust the fuel mixture, turn the pilot screw (2) clockwise until you hear the engine miss or decrease in speed, then counterclockwise until the engine again misses or decreases in speed. Center the pilot screw exactly between these two extreme positions.
   Usually the correct setting (between extremes of rich and lean) will be found to be 1-1/2 turns open from a fully closed position.
   If idle speed changes after adjusting the fuel mixture, readjust the throttle stop screw.

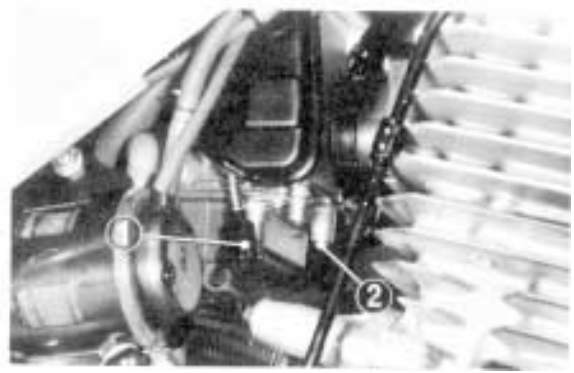

(1) Throttle stop screw
(2) Pilot screw

HIGH ALTITUDE ADJUSTMENT

When operating this TRX at high altitude, the air-fuel mixture becomes overly rich.

Above 6,000 feet (1,800 m) driveability and performance may be reduced and fuel consumption increased.

A high altitude jet is available for carburetor modification to compensate for this high altitude richness. Although installation and adjustment procedures are offered here, we strongly urge that this carburetor modification be performed by your authorized Honda dealer, unless you are mechanically proficient and have the necessary tools.

CAUTION:

* *Sustained operation at lower altitudes below 5,000 feet (1,500 m) with the high altitude jet installed may cause engine overheating and damage.*

Altitude	Main jet	Pilot screw
Below 6,000 feet	No. 140	Factory preset
Above 5,000 feet	No. 132	Screw in 1/4 from factory preset

Adjustment: Above 5,000 ft (1,500 m)

WARNING

* ***Gasoline is extremely flammable and is explosive under certain conditions. Perform this operation in a well-ventilated area. Do not smoke or allow flames or sparks in the area.***

1. Turn the fuel valve OFF and drain fuel from the float chamber.
2. Remove the seat. Unscrew the wing bolt (1) and remove the air cleaner top cover (2).
3. Remove the mount bolts (3) attaching the rear of the front fender on both sides.

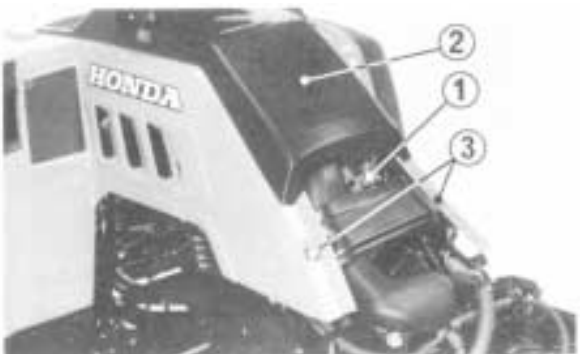

(1) Wing nut
(2) Air cleaner top cover
(3) Mount bolts

4. Unscrew the bolts (4) and remove the cross member (5).
5. Loosen the connecting tube band screws (6) at the air cleaner and carburetor, and remove the connecting tube (8) by removing the bolt (7).

6. Loosen the carburetor insulator band screw (9) and remove the carburetor from the cylinder head.

NOTE:
Do not let dirt and dust enter the engine through the intake port.

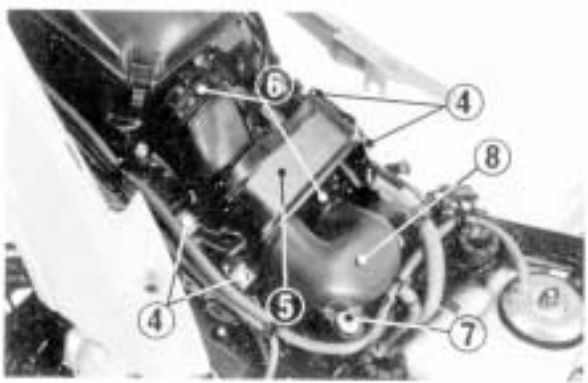

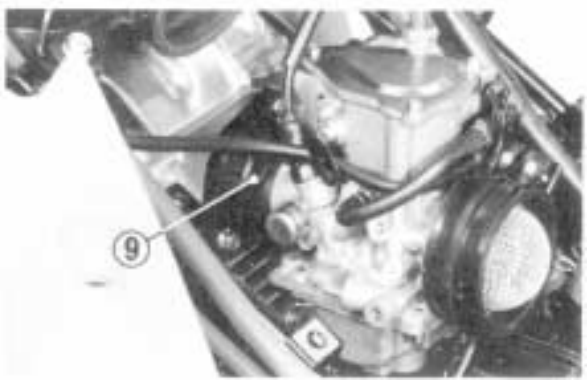

(4) Bolts
(5) Cross member
(6) Band screws
(7) Mount bolt
(8) Connecting tube

(9) Carburetor insulator band screw

7. Separate the float chamber (10) from the carburetor body by removing the four screws.
8. Remove the main jet (11), and install the adjustment main jet.
9. Screw in the pilot screw (12) 1/4 turn from the factory preset position.

NOTE:

* Do not over tighten the main jet.

10. Assemble the removed parts in the reverse order of removal.
11. Adjust the carburetor idle speed (page 60).

NOTE:

* Adjust the idle speed at high altitude to ensure proper high altitude operation.

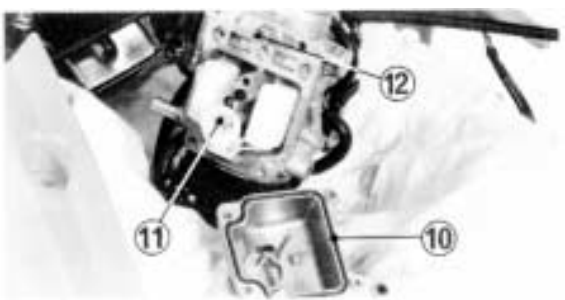

(10) Float chamber (12) Pilot screw
(11) Main jet

Adjustment: Below 6,000 ft (1,800 m)

1. Follow adjustment steps 1 to 7.
2. Reinstall the standard main jet and turn the pilot screw 1/4 turn out.
3. Reinstall the removed parts in the reverse order of removal.
4. Adjust the carburetor idle speed (page 60).

NOTE:

* Adjust the idle speed at low altitude to ensure proper low altitude operation.

FINAL DRIVE OIL

Change the final drive and front differential gear oil when specified by the maintenance schedule.

NOTE:

* Change the oil with the final drive and front differential warm, and the TRX on level ground to assure complete and rapid draining.

1. Front differential only: Remove the front guard plate (1) by removing the bolts.
2. To drain the oil, remove the oil filler cap (2) and drain plug (3).
3. After the oil has completely drained, install the drain plug.
   Drain Plug Torque:
   10–14 N·m (1.0–1.4 kg-m, 7–10 ft-lb)
4. Fill the final drive with approximately 100 cc (3.3 US oz) and the front differential with approximately 200 cc (6.6 US oz) of the recommended oil.
   Make sure the recommended oil is filled up to the lower edge of the inspection hole (4).
5. Install the oil filler cap.
6. Front differential only: Install the front guard plate.

Recommended oil: HYPOID GEAR OIL SAE 80

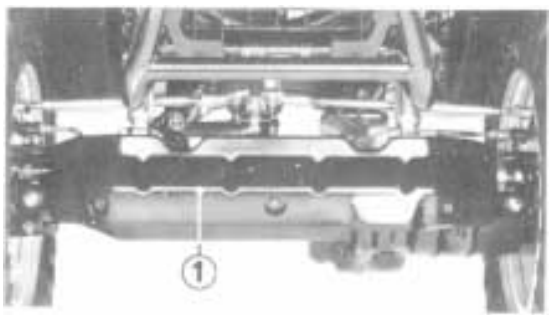

(1) Front guard plate

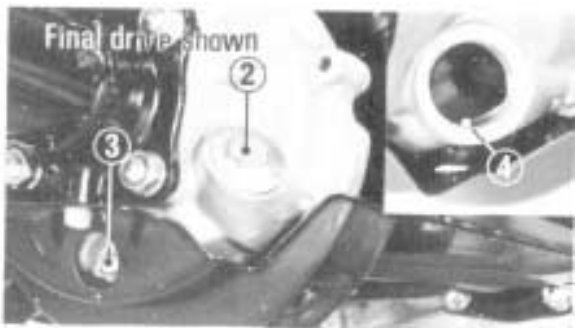

(2) Oil filler cap
(3) Oil drain plug
(4) Inspection hole

BRAKES

Front Brake Lever

This TRX has hydraulic front drum brakes. As the brake shoe linings wear, brake fluid level drops, automatically compensating for wear.

Fluid level and shoe lining wear must be inspected periodically. The system must be inspected frequently to ensure there are no fluid leaks.

1. Measure the distance the brake lever moves before the brake starts to take hold.
   Free play, measured at the tip of the front brake lever (1), should be within 25–30mm (1–1·¼ in). in).

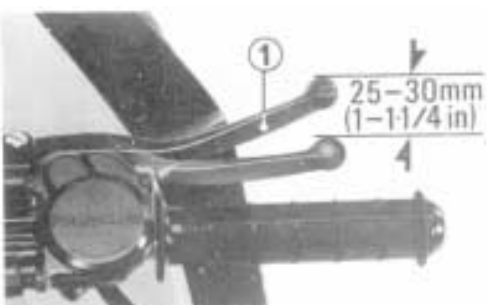

(1) Front brake lever

2. Remove the brake shoe lining inspection hole cap (2) and inspect the lining thickness.
   Lining Thickness:
   Standard: 4.0 mm (0.16 in)
   Service Limit: 1.0 mm (0.04 in)

NOTE:

* If either lining is worn beyond the limit, both brake shoes must be replaced.

3. If the brake lever free play is excessive and the brake linings are not worn beyond the recommended limit, adjust the brake shoe lining-to-drum clearance.

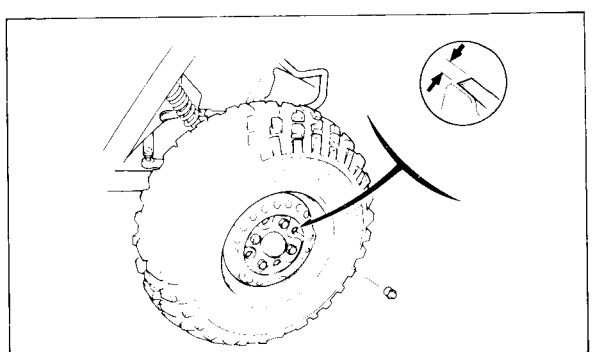

(2) Lining inspection hole cap

4. Recheck the brake lever free play. If free play is still excessive after adjusting the brake lining clearance, there is probably air in the brake system and it must be bled out. See your authorized Honda dealer for this service.

Adjustment:

1. Pump the brake lever 2-3 times firmly and release it.
2. Raise the front and rear wheels off the ground by placing a support block under the engine.
3. Remove the adjusting cap (1).
4. Turn the both brake shoe adjusters (2) of each wheel cylinder up with a screwdriver until the front brake locks.

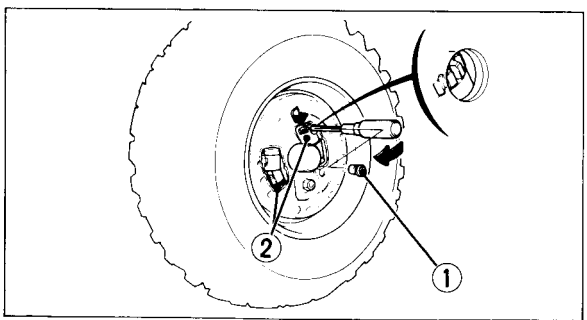

(1) Adjustment hole cap (2) Adjusters
(A) Brake locks

5. Back the adjusters off three clicks and pump the brake lever several times.
6. Turn the wheel 180° and follow the Steps 3 thru 5 on the other adjusters.
7. Turn the wheel manually and make sure it does not drag.
8. Adjust the other front brake.
9. Install the rubber cap.

Brake Fluid Level:

WARNING

* *Brake fluid may cause irritation. Avoid contact with skin or eyes. In case of contact, flush thoroughly with water and call a doctor if your eyes were exposed.*

Remove the screws, reservoir cover, and diaphragm. Whenever the level is near the lower level mark on the reservoir, fill the reservoir with DOT 3 or 4 BRAKE FLUID from a sealed container up to the upper level mark. Reinstall the diaphragm and cover. Tighten the screws securely.

CAUTION

* *When adding brake fluid, be sure the reservoir is horizontal before the cover is removed or brake fluid may spill out.*

* *Use only DOT 3 or 4 brake fluid from a sealed container.*
* *Handle brake fluid with care because it can damage paint and instrument lenses.*
* *Never allow contaminants (dirt, water, etc.) to enter the brake fluid reservoir.*

Other Checks:

Make sure there are no fluid leaks. Check for deterioration or cracks in the hose and fittings.

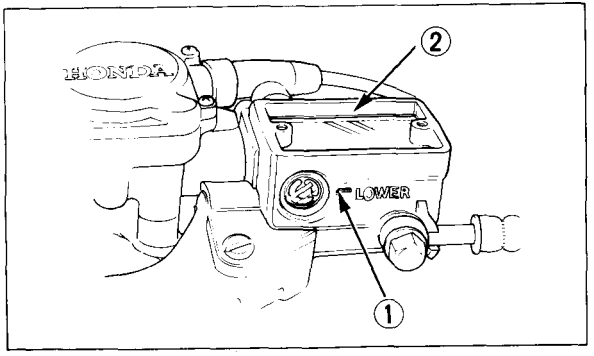

(1) Lower level mark
(2) Upper level mark

Rear Brake Pedal

Measure the distance the rear brake pedal moves before the brake starts to take hold.
Free play, measured at the end of the pedal (1), should be 15–20 mm (5/8–3/4 in.).
Adjust by turning the brake pedal adjusting nut (2) located on the brake operating rod at the rear of the frame.

NOTE:
* Make sure the cut-out on the adjusting nut is seated on the brake arm pin.

Other Checks:
Check the brake cable for kinks or signs of wear that could cause sticking or failure. Lubricate the brake cable with a commercially available cable lubricant to prevent premature wear and corrosion.
Make sure the brake arm, spring, and fasteners are in good condition.

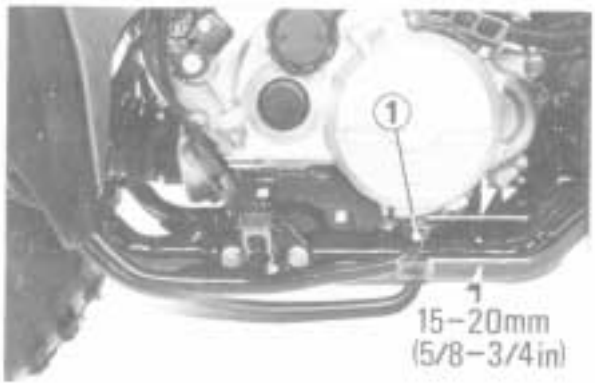

(1) Rear brake pedal

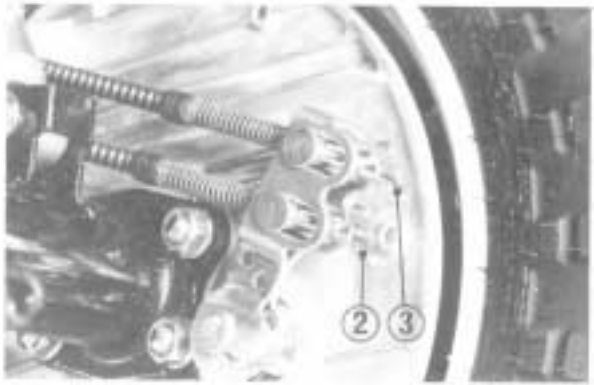

(2) Brake pedal adjusting nut
(3) Brake lever adjusting nut

Rear Brake Lever/Parking Brake

Measure the distance the rear brake lever moves before the brake starts to take hold.

Free play, measured at the tip of the brake lever (4), should be within 15–20 mm (5/8–3/4 in). Minor adjustments can be made with the upper adjuster (6) on the front brake lever. Loosen the lock nut (5) and turn the upper adjuster (6). Major adjustments should be made using the lower adjuster (7) located on the brake arm (8).

Other Checks:

Check the brake cable for kinks or signs of wear that could cause sticking or failure. Lubricate the brake cable with a commercially available cable lubricant to prevent wear and corrosion. Make sure the brake arm, spring, and fasteners are in good condition.

Wear Indicator:

When the brake is applied, an arrow (10), attached to the brake arm (8), moves toward a reference mark (9) on the brake panel.

If the arrow aligns with the reference mark on full application of the brake, the brake shoes must be replaced. See your authorized Honda dealer for this service.

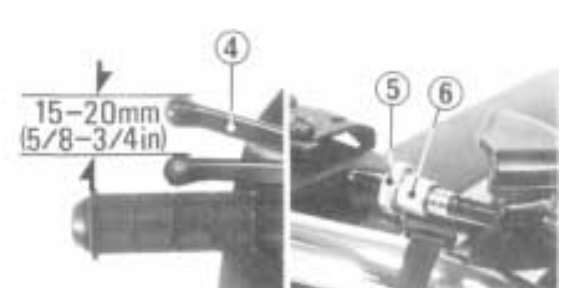

(4) Rear brake lever
(5) Lock nut
(6) Upper adjuster

(7) Lower adjuster
(8) Brake arm
(9) Reference mark
(10) Arrow

CLUTCH

1. Make sure the ignition switch is OFF.
2. Loosen the lock nut (1), and turn the clutch adjuster (2) counterclockwise until you feel slight resistance. Then turn the adjuster 1/4 turn clockwise, and tighten the lock nut to hold the adjuster in this position.
3. After adjustment, start the engine and test ride the TRX to be certain that the clutch is operating properly.

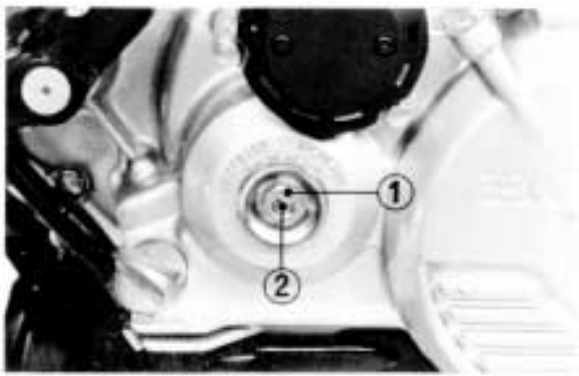

(1) Lock nut (2) Clutch adjuster

SKID AND GUARD PLATES

Skid (1) and guard (2) plates protect the engine, front and rear differential and front axle from rocks. Check the plates for cracks, damage or looseness at intervals shown in the Maintenance Schedule.
Replace the plates with new ones if they are cracked or damaged.
Retighten the plate bolts if they are loose.

Torques:
8 mm bolts: 1.8–2.5 kg-m (13–18 ft-lb)

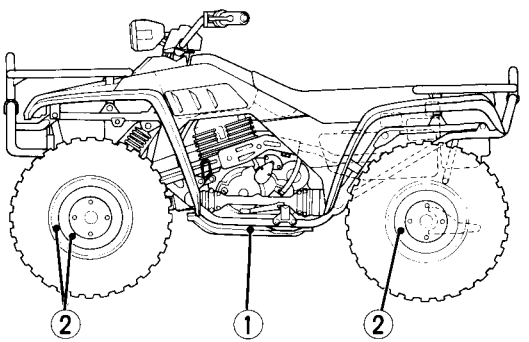

(1) Skid Plate (2) Guard plates

Storage

Extended storage, such as for winter, requires that you take certain steps to reduce the effects of deterioration from non-use of the TRX. In addition, necessary repairs should be made BEFORE storing the TRX; otherwise, these repairs may be forgotten by the time the TRX is removed from storage.

1. Change the engine oil and oil filter.
2. Drain the fuel tank and carburetor. Spray the inside of the tank with an aerosol rust-inhibiting oil. Reinstall the fuel cap on the tank.

WARNING

* ***Gasoline is flammable and is explosive under certain conditions. Do not smoke or allow flames or sparks near the equipment while draining fuel.***

3. Remove the spark plug and pour a tablespoon (15 -20 cc) of clean engine oil into the cylinder. Operate the starter for a few seconds to distribute the oil, then reinstall the spark plug.

NOTE:

* When turning the engine over, the Engine Stop Switch should be OFF and the spark plug placed in its cable cap and grounded to prevent damage to the ignition system.

4. Remove the battery. Store in an area protected from freezing temperatures and direct sunlight. Check the electrolyte level and slow charge the battery once a month.
5. Wash and dry the TRX.

6. Inflate the tires to their recommended pressures. Place the TRX on blocks to raise all tires off the ground.
7. Cover the TRX (don't use plastic or other coated materials) and store in an unheated area, free of dampness with a minimum of daily temperature variation. Do not store the TRX in direct sunlight.

Removal from Storage

1. Uncover and clean the TRX. Change the engine oil if more than 4 months have passed since the start of storage.
2. Check the voltage and slow charge the battery if it is below 12.8V. Install the battery.
3. Drain any excess aerosol rust-inhibiting oil from the fuel tank. Fill the fuel tank with fresh gasoline.
4. Perform all Pre-ride Inspection checks (page 30). Test ride the TRX at low speeds in a safe riding area.

1. Turn the fuel tank cap lever and fuel valve OFF.
2. Place the carburetor drain tube in a suitable container.
3. Turn the drain screw counterclockwise to drain the gasoline from the carburetor.

WARNING

* *Gasoline is flammable and is explosive under certain condition. Do not smoke or allow flames or sparks near the equipment while draining fuel.*
* *Never incline the machine with the front wheels up without draining the fuel and removing the battery. Fuel vapor or spiled fuel may ignite and the battery may leak electrolyte.*

4. After draining turn the drain screw clockwise until tight.

NOTE:

* Be sure the fuel drain is closed (screw turned clockwise) before refueling the TRX.
* It is not necessary to drain the engine oil from the crankcase, as no appreciable oil leakage will occur when the TRX is inclined with the front wheels up.

5. Remove the battery, disconnecting the negative (–) terminal first, then the positive (+) terminal. When reinstalling the battery, connect the positive (+) terminal first, then the negative (–).
6. If wheel removal is required when transporting, follow the procedures on the following pages.
7. Always check tire pressures just before riding.

Front Wheel Removal

1. Place a support block under the engine to raise the front wheels off the ground.
2. Loosen the wheel nuts (1) and remove the wheels.

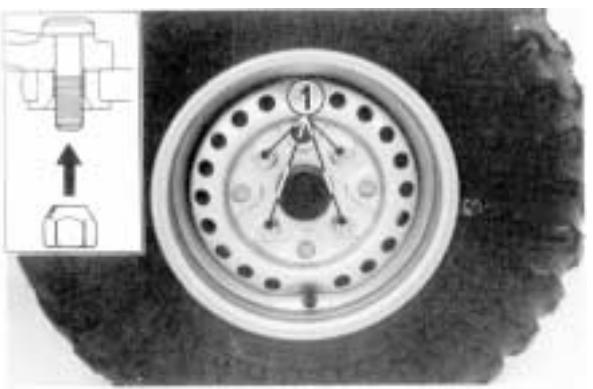

(1) Wheel nuts

Installation Notes:

Reinstall the front wheels and tighten the wheel nuts (1) in a crsscross pattern to 60–70 N·m (6.0–7.0 kg-m, 43-50 ft-lb).

WARNING

* ***If a torque wrench was not used for installation, see your authorized Honda dealer as soon as possible to verify proper assembly.***
* ***Install the wheel nuts with their tapers on the inside as shown.***

Rear Wheel Removal

1. Place a support block under the vehicle and raise the rear wheels off the ground.
2. Loosen the wheel nuts (1).
3. Remove the wheels.

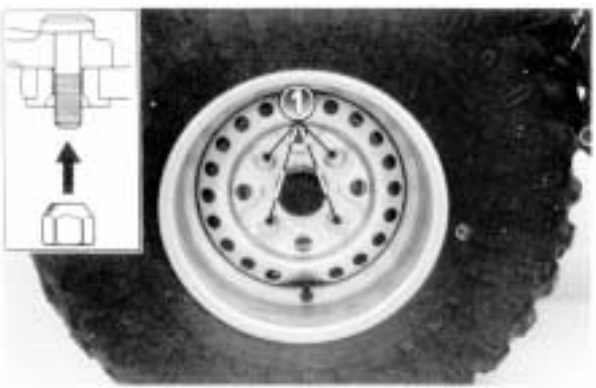

(1) Wheel nuts

Installation Notes:

Reinstall the rear wheels and tighten the wheel nuts (1) in a cross pattern to 60–70 N·m (6.0–7.0 kg-m, 43–50 ft-lb).

WARNING

* ***If a torque wrench was not used for installation, see your authorized Honda dealer as soon as possible to verify proper assembly.***
* ***Install the wheel nuts with their tapers on the inside as shown.***

SPECIFICATIONS

DIMENSIONS	
Overall length	1,930 mm (76.0 in)
Overall width	1,040 mm (40.9 in)
Overall height	1,080 mm (42.5 in)
Wheelbase	1,210 mm (47.6 in)
WEIGHT	
Dry weight	268 kg (590 lb)
CAPACITIES	
Engine oil	2.6 ℓ (2.7 US qt)
Fuel tank	10.5 ℓ (2.7 US gal)
Fuel reserve capacity	2.0 ℓ (0.52 US gal)
Passenger capacity	Operator only
ENGINE	
Bore and stroke	81 x 68 mm (3.2 x 2.7 in)
Compression ratio	8.5:1
Displacement	350.4 cc (21.4 cu-in)
Spark plug gap	0.6–0.7 mm (0.023–0.028 in)
Valve clearance	0.08 mm (0.003 in)

CHASSIS AND SUSPENSION	
Caster angle	3°
Trail length	14 mm (0.55 in)
Tire size, front	24 x 9.00–11
rear	24 x 9.00–11
POWER TRANSMISSION	
Primary reduction	2.103
Final reduction	3.889
Gear ratio, 1st	2.389
2nd	1.609
3rd	1.179
4th	0.906
SL	4.083
Reverse gear ratio	4.781

WIRING DIAGRAM

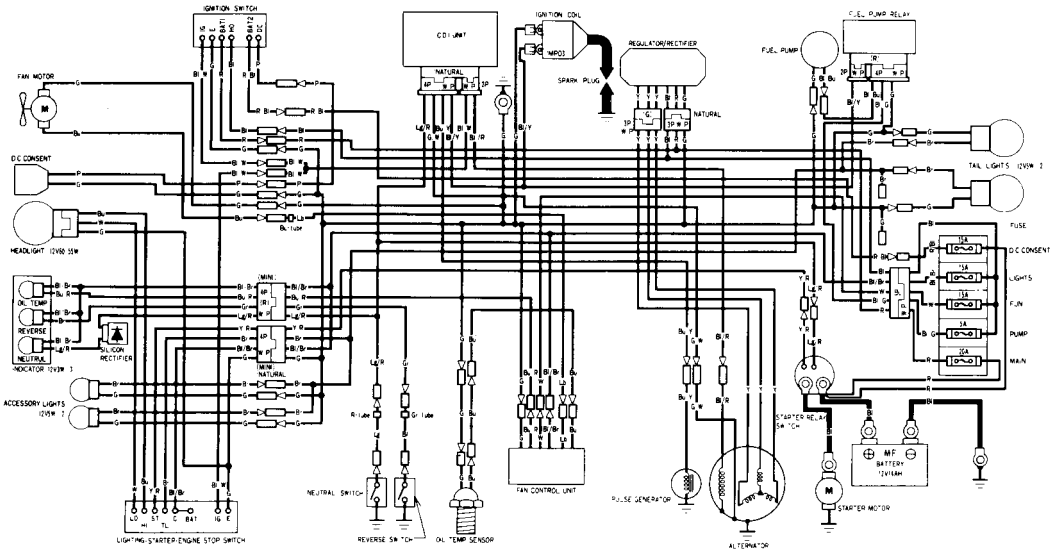

Bl	BLACK	Br	BROWN
Y	YELLOW	O	ORANGE
Bu	BLUE	Lb	LIGHT BLUE
G	GREEN	Lg	LIGHT GREEN
R	RED	P	PINK
W	WHITE	Gr	GRAY

SWITCH CONTINUITY

IGNITION SWITCH

	BAT2	DC	IG	E	BAT	HO
OFF			○	○		
ON	○	○			○	○
COLOR	R Bl	P	Bl W	G	R	Br

LIGHTING SWITCH

		TL	LO	H
OFF				
ON	LO	○	○	
	H	○		○
	HI	○		○
COLOR	Br	Bl Br	W	Bu

STARTER SWITCH

	BAT	ST
PUSH	○	○
FREE		
COLOR	(Bl Br)	Y R

ENGINE STOP SWITCH

	E	IG
OFF	○	○
RUN		
COLOR	G	Bl W

0030Z-HA7-7700

4x4 TRX350

HONDA

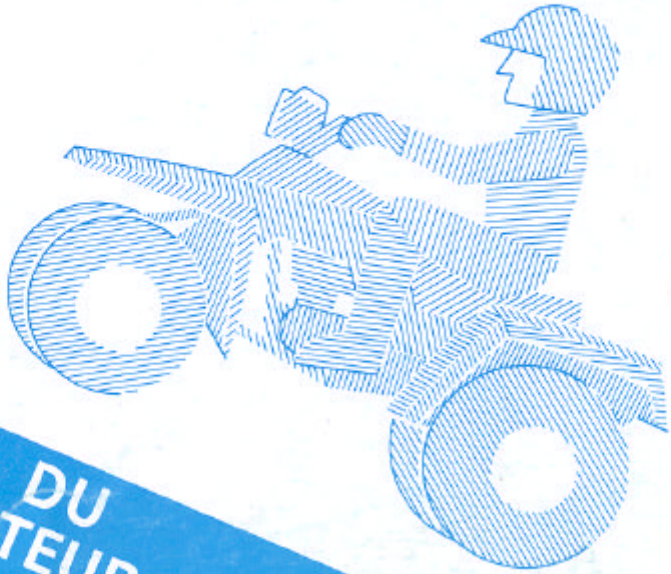

MANUEL DU CONDUCTEUR

38HA7610
00X38-HA7-6100

Ⓝ Ⓘ 5008606 H
PRINTED IN JAPAN