HONDA

BIG RED 300 x4

BIG RED 300 4 x 4

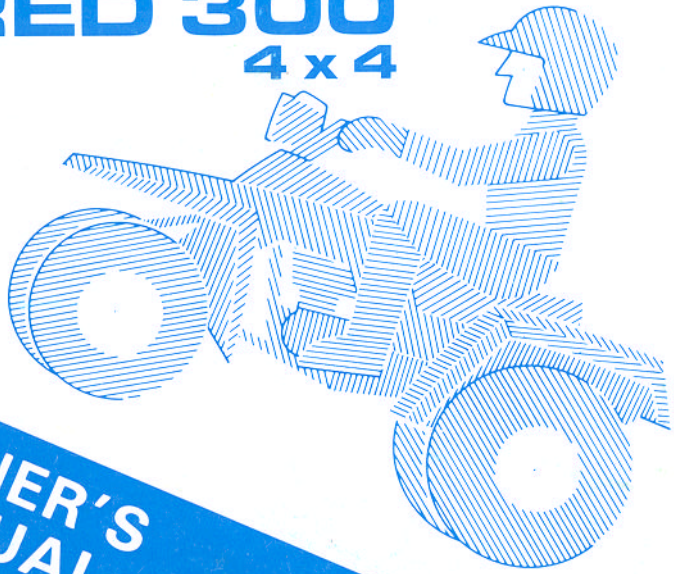

OWNER'S MANUAL

IMPORTANT NOTICE

- **OPERATOR ONLY. NO PASSENGERS.**
  This vehicle is designed and constructed as an operator-only model. The vehicle load limit and seating configuration do not safely permit the carrying of a passenger.

- **OPERATOR AGE RECOMMENDATION.**
  The recommended rider age for this ATV is age 16 or older.

- **FOR OFF ROAD USE ONLY.**
  This vehicle is designed and manufactured for off road use only.

- **READ THIS OWNER'S MANUAL CAREFULLY.**
  Pay special attention to statements preceded by the following words:

⚠ WARNING

Indicates a strong possibility of severe personal injury or death if instructions are not followed.

CAUTION:
Indicates a possibility of personal injury or equipment damage if instructions are not followed.

NOTE: Gives helpful information.

This manual should be considered a permanent part of the BIG RED and should remain with the BIG RED when resold.

HONDA TRX 300 FW
BIG RED 300 x4
OWNER'S MANUAL
HONDA TRX 300 FW
BIG RED 300 4x4
OWNER'S MANUAL

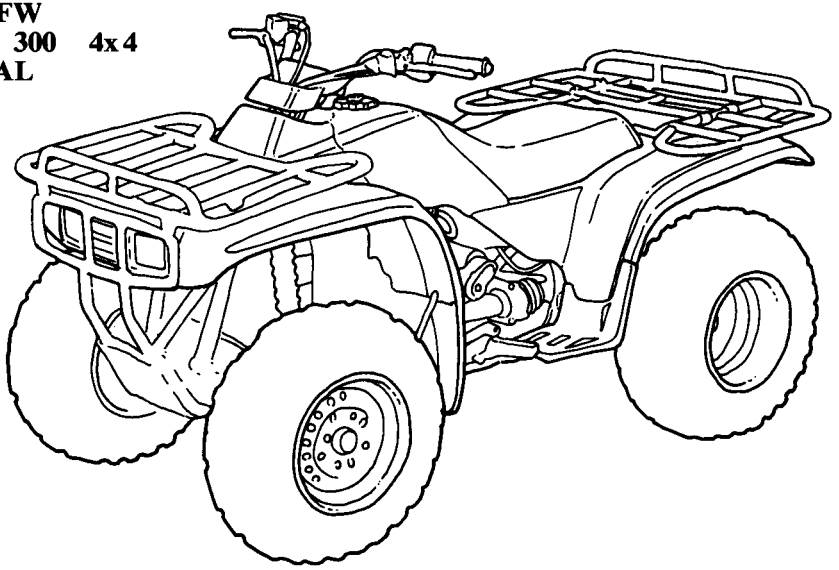

All information in this publication is based on the latest product information available at the time of approval for printing. HONDA MOTOR CO., LTD. reserves the right to make changes at any time without notice and without incurring any obligation.
No part of this publication may be reproduced without written permission.

© Honda Motor Co., Ltd. 1988

PREFACE

This booklet is your guide to the basic operation and proper maintenance of your new Honda BIG RED. Please take the time to read it carefully. Details necessary for riding the Honda BIG RED are given to acquaint the new owner with special riding techniques to be learned. When service is required, remember that your Honda dealer knows your vehicle best. If you have the required mechanical "know-how" and tools, your dealer can supply you with an official Honda Service Manual to help you perform many maintenance and repair tasks.

Thank you for selecting a Honda. We wish you continued riding pleasure in the miles ahead.

NOTE:

* When reference to the right or left side of the vehicle is made, it is determined from the rider's view.

CONTENTS

	Page
BIG RED SAFETY	1
Safe Riding Rules	4
Protective Apparel	4
Modifications	4
Post-Ride Cleaning and Inspection	5
Loading and Accessories	5
DESCRIPTION	7
Parts Location	7
Serial Numbers	9
Parts Function	10
Fuel	21
Engine Oil	24
Tyres	26
Battery	28
OPERATION	29
Pre-Ride Inspection	29
Starting the Engine	30
Running-in	34
Riding	35
Parking	46
MAINTENANCE	47
Maintenance Schedule	47
Maintenance Precautions	49
Tool Kit	49
Fuel Filter Screen	50
Throttle Operation	51
Air Cleaner	52
Air Cleaner Case Drain Tube	53
Spark Plug	54
Valves	55
Engine Oil and Filter	57
Carburetor Choke	58
Carburetor	59
High Altitude	60
Gear Case Oil	62
Final Drive Oil	63
Brakes	64
Clutch	69
Reverse Engagement Lever	70
Engine Guard and Skid Plates	70
Driveshaft Boots	71
STORAGE GUIDE	72
TRANSPORTING	74
SPECIFICATIONS	77
WIRING DIAGRAM	78

Read this WARNING INFORMATION before you ride!

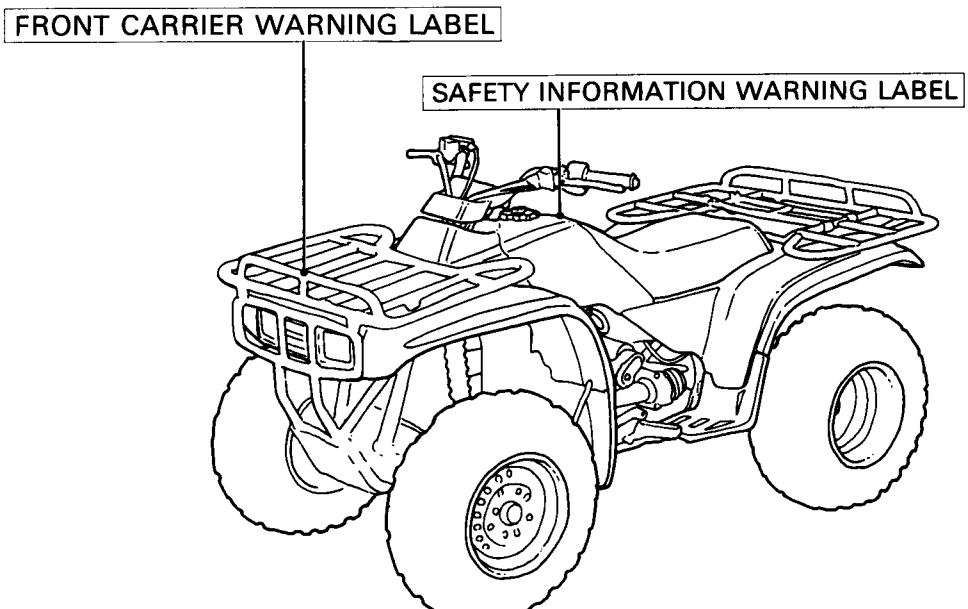

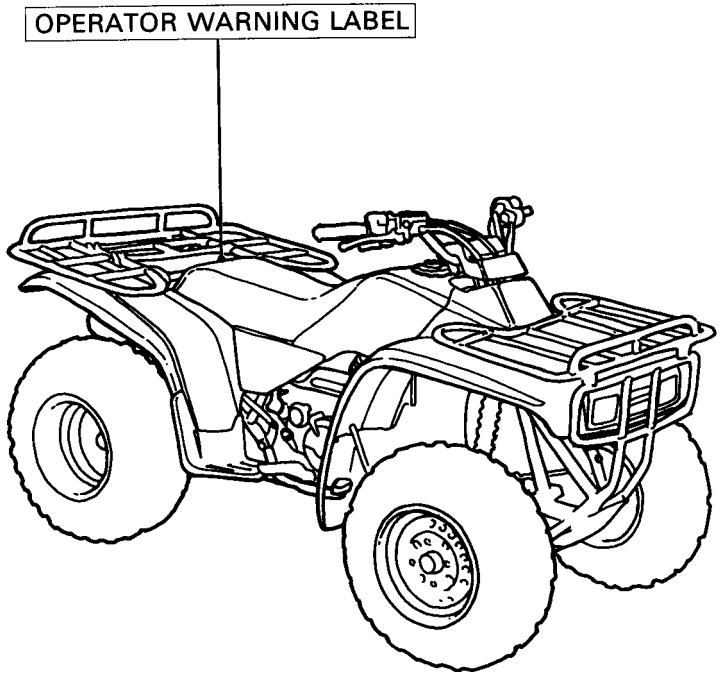
OPERATOR WARNING LABEL

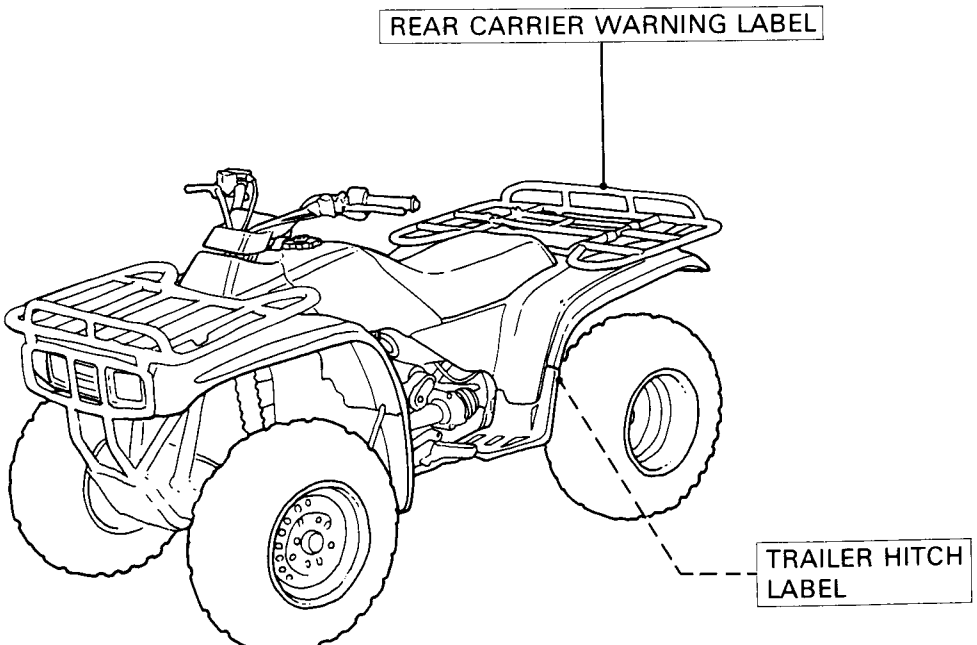
REAR CARRIER WARNING LABEL
TRAILER HITCH LABEL

⚠ WARNING

* ***BIG RED riding requires special efforts on your part to ensure your safety. Know these requirements before you ride.***
* ***Avoid riding on paved surfaces as handling can be seriously affected. If it is necessary, ride at reduced speeds and avoid sudden turns.***

SAFE RIDING RULES

* Always make a pre-ride inspection (page 29) before you ride the BIG RED. You may prevent an accident or equipment damage.
* Always obey local off road riding laws and regulations.
* Obtain permission to ride on private property. Avoid posted areas and obey "no trespassing" signs.
* Do not ride fast on unfamiliar terrain or when visibility is limited. Before riding in a new area, check the terrain thoroughly. Never ride headlong past your limit of visibility. It is sometimes impossible to see obstructions, holes and depressions. Always exercise caution.
* Your ability to operate the BIG RED safely is largely dependent upon your proper judgement.
* Maintain a safe distance between your BIG RED and other off road vehicles.
* Do not ride on or near railroad tracks as it is difficult to hear an approaching train.
* Do not use the flag pole bracket as a trailer hitch.
* When you select reverse gear, make sure there are no obstacles or people behind you. When it is safe to proceed, ride slowly.
* Alcohol, drugs and BIG RED's don't mix. Even the smallest amount of alcohol can impair your ability to operate your BIG RED safely. Likewise, drugs, even if prescribed by a physician, can be dangerous while operating a BIG RED. Consult your doctor to be sure it is safe to operate a motor vehicle after taking medication.

PROTECTIVE APPAREL

* Always wear a helmet. You should also wear a face shield or goggles, boots, gloves and non-snag outer protective clothing.
* The exhaust system becomes very hot during operation and it remains hot after operation. Never touch any part of the hot exhaust system. Wear clothing that fully covers your legs.

MODIFICATIONS

* Modification of the BIG RED, or removal of original equipment, may render the vehicle unsafe or illegal.
* Spark arresters and mufflers are required in most areas. Don't modify your exhaust system. Remember that excessive noise bothers everyone and creates a bad image for off road vehicles.

POST-RIDE CLEANING AND INSPECTION

Dirt, brush and grass that accumulates during off road riding can conceal damage, reduce engine cooling efficiency and overall vehicle performance. If left near the exhaust system, it could be a fire hazard.

Thoroughly clean the entire vehicle (especially the underbody) after riding. Then, carefully inspect the vehicle for wear or damage, paying special attention to the brakes, tyres, driveshafts/boots, steering and suspension systems. Make sure all fasteners are properly tightened. Replace or repair any part that is damaged. Also, thoroughly clean and inspect the exhaust system, and remove all accumulated debris which could be a fire hazard.

LOADING AND ACCESSORIES

⚠WARNING

* ***To prevent an accident, use extreme care when riding with accessories and cargo. The addition of accessories and cargo can reduce the BIG RED's stability, performance, and safe operating speed. Slow down to 10 mph or less when loaded with cargo or pulling a trailer.***

NOTE:

* These loading capacities apply to standard or Honda optional equipment only.

The combined weight of the rider, cargo, and all accessories must not exceed. **220 kg (485 lbs)** which is the maximum weight capacity.

The following loading and towing capacity data is valid only when the riding terrain is level and flat. For different riding terrains, you must exercise your own judgement to load and ride the BIG RED safely because carrying cargo can reduce the ability of the BIG RED to operate on slopes or other rough terrain.

Never exceed the loading capacities given here.

1. Load cargo on the rear carrier as far forward as possible. Do not allow cargo to extend beyond the end of rear carrier.

Front carrier	**30 kg (66 lbs)**
Rear carrier	**60 kg (133 lbs)**

2. When towing a trailer, care should be taken to maintain balance and stability. Place cargo in the trailer so that it will not cause the front wheels to lift off the ground during travel.

Tow weight (Trailer plus cargo weight)	**383 kg (850 lbs)**
Tongue weight (Weight on hitch point)	**14 kg (30 lbs)**

3. When towing a trailer and carrying cargo, the combined tongue weight and rear cargo weight should not exceed 45 kg (100 lbs).
4. Do not obstruct handlebar movement with cargo.
5. Do not ride with a passenger on the front or rear carrier.
   This BIG RED is not designed to carry a passenger.
6. Do not place any baggage anywhere on the BIG RED other than the front and rear carrier, otherwise, operating stability and the engine may be adversely affected.

PARTS LOCATION

(1) Fuel tank cap
(2) Front brake lever
(3) Throttle lever
(4) Ignition switch
(5) Indicator lamps
(6) Kickstarter pedal
(7) Oil filler cap/dipstick
(8) Brake pedal
(9) Headlights

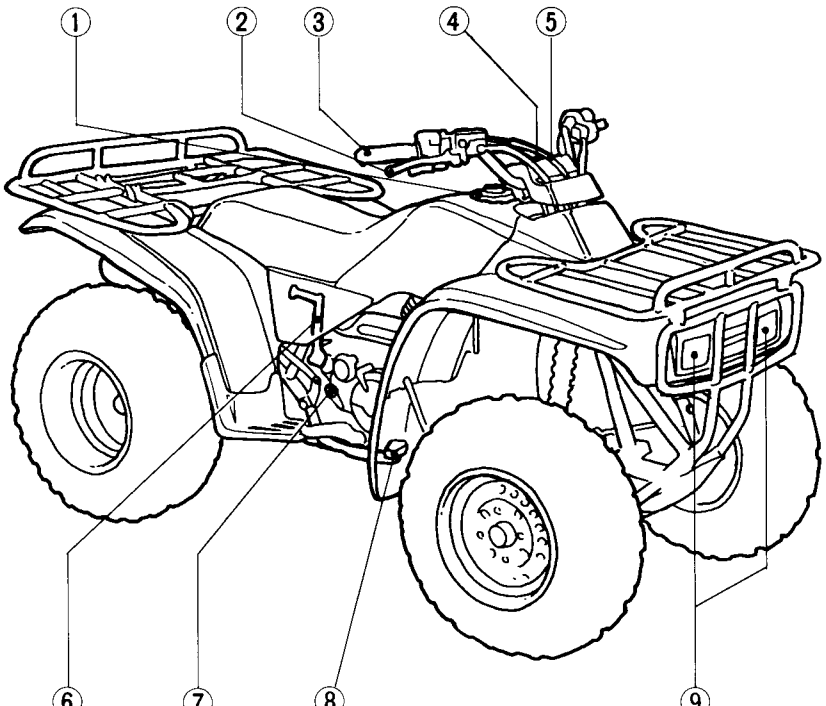

(10) Helmet holder
(11) Parking brake lock lever
(12) Reverse selector knob
(13) Handlebar switches/choke lever
(14) Rear brake lever/parking brake
(15) Tool kit and air pressure gauge
(16) Storage compartment
(17) Fuel cock
(18) Gearshift pedal
(19) Battery

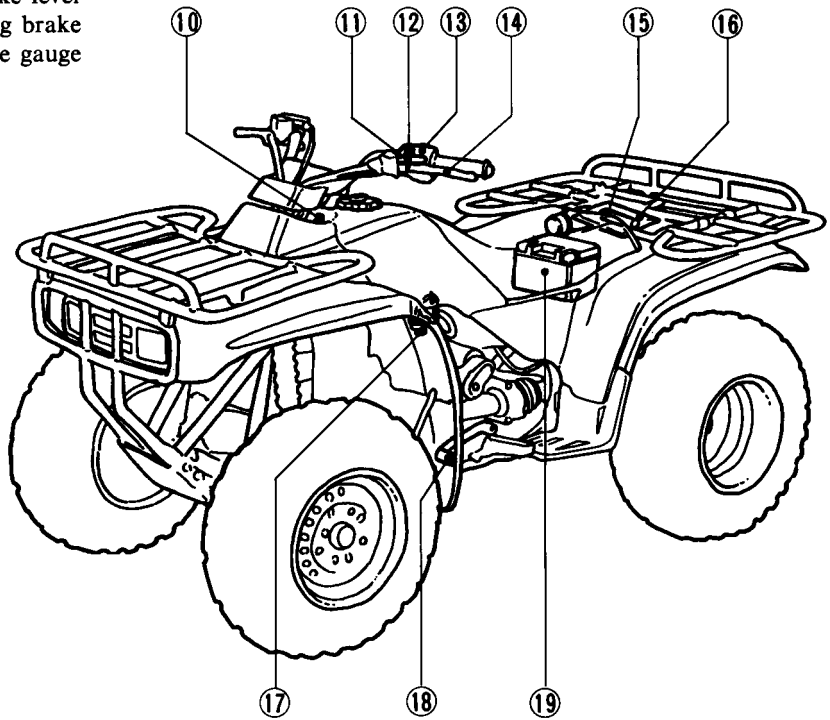

SERIAL NUMBERS

The frame and engine serial numbers are required by your dealer when ordering replacement parts. Record the numbers here for your reference.
The frame serial number (1) is stamped on the front of the frame. The engine serial number (2) is stamped on the right crankcase.

FRAME NO._____

ENGINE NO._____

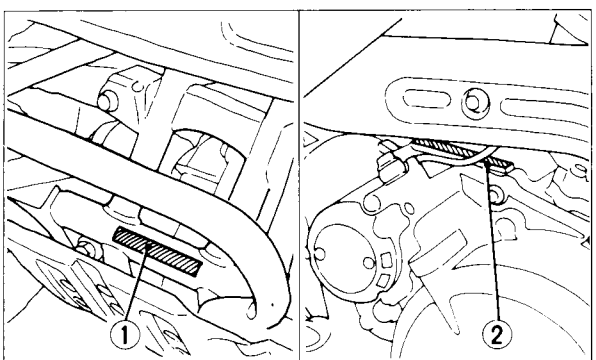

(1) Frame serial number (2) Engine serial number

PARTS FUNCTION

Ignition Switch

The ignition switch (1) is on the handlebar upper holder.

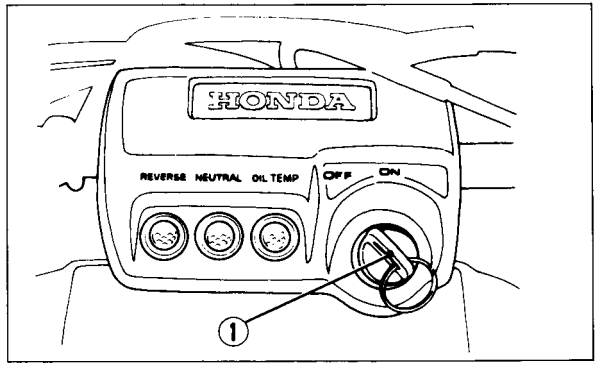

(1) Ignition Switch

Key Position	Function	Key Removal
OFF	Engine and headlights cannot be operated.	The key can be removed.
ON	The headlights can be turned on. With the engine stop switch at RUN and transmission in neutral, the engine can be started.	The key cannot be removed.

Starter Button

The starter button (1) is below the headlight switch. When the starter button is pressed, with the transmission in neutral and the ignition switch on, the starter motor will crank the engine.

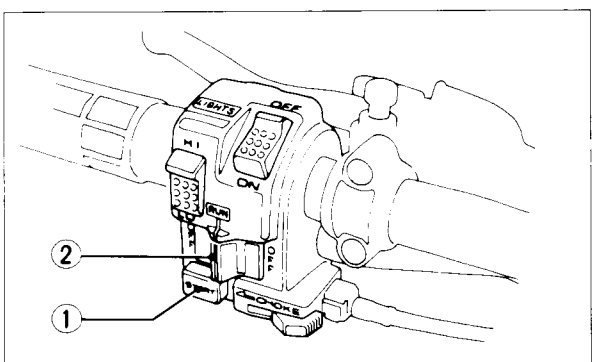

(1) Starter button (2)Engine stop switch

Engine Stop Switch

The three position engine stop switch (2) is next to the left handlebar grip. When the switch is in the RUN position, the engine will operate. When the switch in either OFF position, the engine will not operate.
This switch is intended primarily as a safety or emergency switch and should normally remain in the RUN position.

NOTE:

* If your BIG RED is stopped with the ignition switch ON and the engine stop switch OFF, the headlights will still be on, resulting in battery discharge.

Headlight and Headlight Dimmer Switches

The headlight (1) and headlight dimmer (2) switches are above the engine stop switch.
Turning the headlight switch ON causes the headlights to light. Select headlight high beam (HI) or low beam (LO) with the dimmer switch.

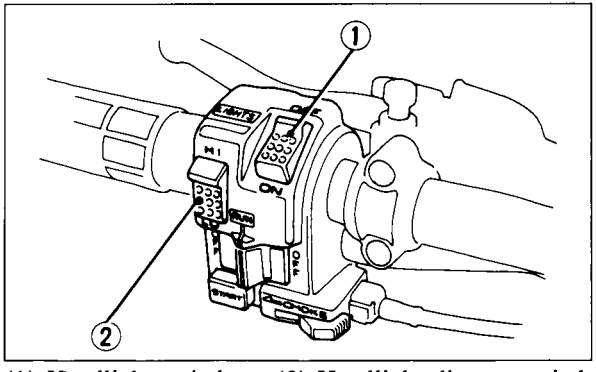

(1) Headlight switch (2) Headlight dimmer switch

Engine Oil Temperature Warning Lamp

When the engine oil temperature becomes too high, the engine oil temperature warning lamp (1) will light. The engine oil temperature warning lamp will light but go off several seconds after turning the ignition switch ON.

CAUTION:

* *If the engine oil temperature warning lamp lights while you are riding, stop the engine immediately and let it cool. Failure to stop the engine immediately will adversely affect the service life of the engine.*

If the warning lamp comes on frequently while riding, have your BIG RED inspected by your authorized Honda dealer.
A heavy duty cooling fan is available as an optional part to provide more air flow under adverse conditions.

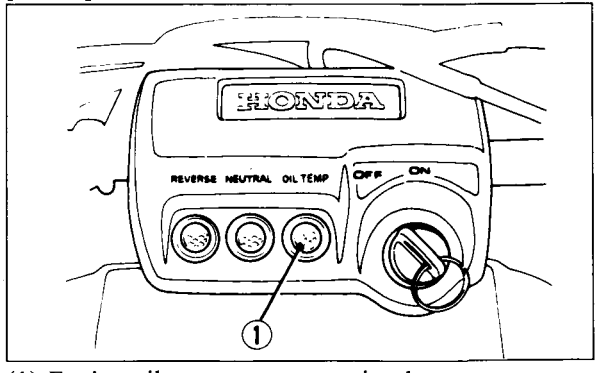

(1) Engine oil temperature warning lamp

CAUTION:

* *Do not carry or store articles on the front bumper as such practice may restrict air flow through the engine, resulting in engine overheating.*

Reverse Indicator Lamp

This BIG RED is equipped with a reverse indicator lamp (1) to show when the transmission is in reverse. The reverse indicator lamp is on the handlebar cover and will light when the transmission is in reverse with the ignition switch ON.

Neutral Indicator Lamp

This BIG RED is equipped with a neutral indicator lamp (2) to show when the transmission is in neutral. The neutral indicator lamp is on the handlebar cover and will light when the transmission is in neutral with the ignition switch ON.

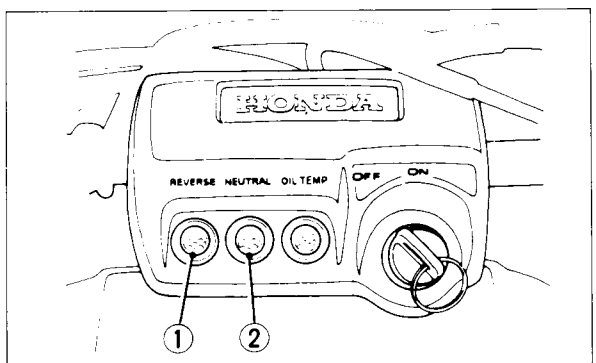

(1) Reverse indicator lamp (2) Neutral indicator lamp

Throttle Lever

The throttle lever (1) is next to the right handlebar grip and is operated by the rider's thumb. Pressing the lever forward opens the throttle. When the lever is released, spring tension closes the throttle automatically.

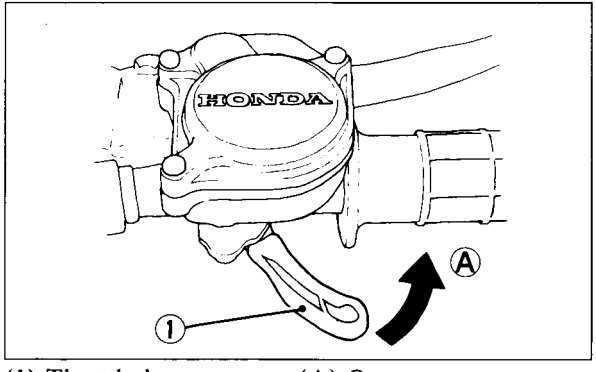

(1) Throttle lever (A) Open

Choke Lever

The choke lever (1) is next to the left handlebar grip. While pushing it in, move the choke lever to the left for starting the engine when cold. Move the lever to the right as the engine attains normal operating temperature.

To restart a warm engine, it is not necessary to use the choke.

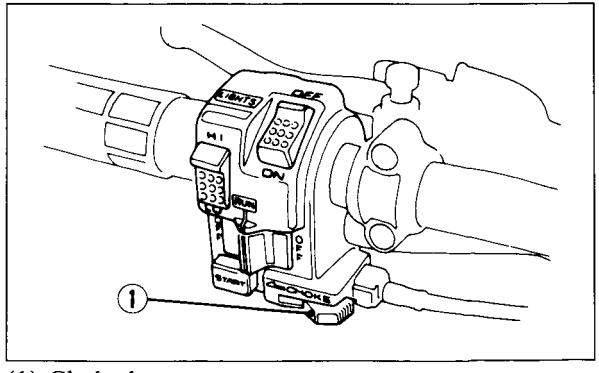

(1) Choke lever

Rear Brake Lever/Parking Brake

The front brakes are operated by the right hand brake lever. The rear brake lever (1) and the brake pedal both operate the rear brake. Either one can be used to brake the BIG RED. The rear brake lever has the added feature of a lock (2) which allows the lever to be used as a parking brake.

Pull the rear brake lever back and lock it with the lock lever. Always apply the parking brake when parking the BIG RED and when starting the engine.

The parking brake is unlocked by squeezing the rear brake lever.

NOTE:

* Use of the parking brake in freezing weather may cause the brakes to freeze in the locked position.

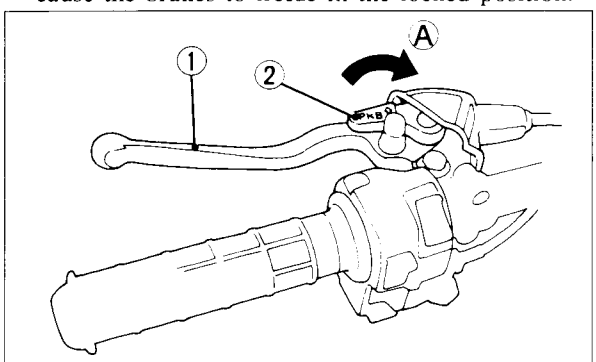

(1) Rear brake lever/Parking brake (2) Lock lever
(A) Lock

Reverse Selector Knob

The reverse selector knob (1) is on the rear brake lever (2).

When shifting the transmission into reverse, bring the BIG RED to a complete stop, push the reverse selector knob in and squeeze the rear brake lever.

The transmission will be shifted into reverse by depressing the gearshift pedal.

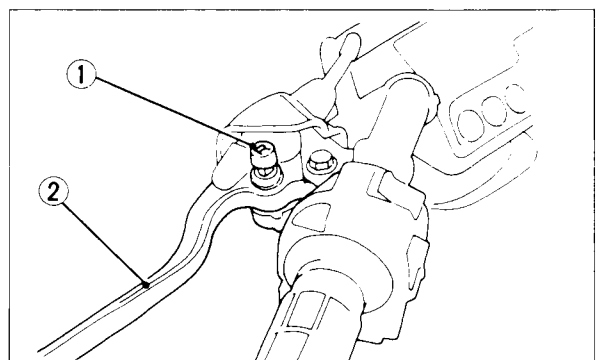

(1) Reverse selector knob (2) Rear brake lever

Helmet Holder

The helmet holder (1) is located on the left side of the fork bridge. To use the helmet holder, hang your helmet on the holder by the D-ring.

⚠ WARNING

* ***Do not operate the BIG RED with a helmet attached to the holder; your ability to steer will be impaired. The helmet holder is designed for use only while the BIG RED is parked.***

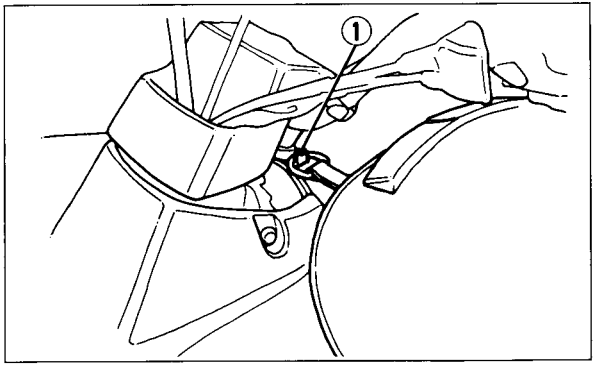

(1) Helmet holder

Storage Compartment

The storage compartment (1) is behind the seat. Unhook the stopper rubbers (2) to open the carrier (3) and storage compartment. The owner's manual (4), tool kit (5) and air pressure gauge (6) should be stored in the storage compartment.

When washing your BIG RED or riding through water, be careful not to flood this area with water.

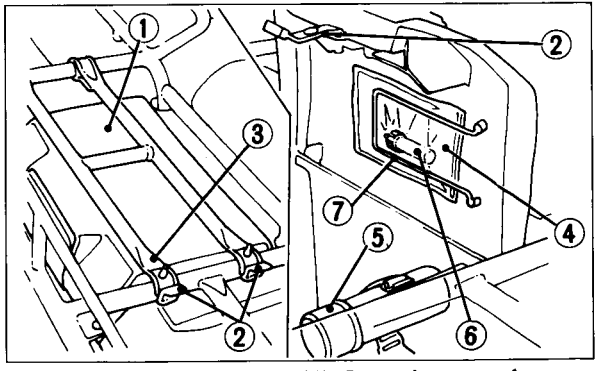

(1) Storage compartment
(2) Stopper rubber
(3) Carrier
(4) Owner's manual
(5) Tool kit
(6) Air pressure gauge
(7) Manual holder

Seat Removal

1. Release the seat lock by pulling up the seat lock lever (1) at the left side of the seat.
2. Remove the seat (2) by lifting it upward.

Installation:

1. Insert the front prong (3) into the recess (4) and the rear studs (5) into the rubber mounts (6).
2. Secure the seat by pressing down until it locks.

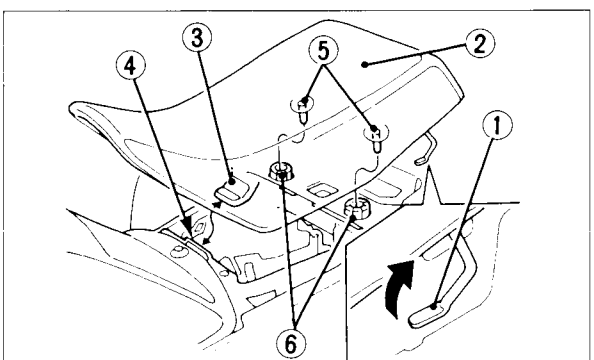

(1) Seat lock lever
(2) Seat
(3) Front prong
(4) Recess
(5) Rear studs
(6) Rubber mounts

12V DC Power Supply

The direct current receptacle (1) is on the right side of the headlight. It provides 12V DC power at a maximum of 60 watts (5 Amps). The specified fuse is 15A.

⚠WARNING

* ***Never use a fuse with a different rating from that specified. Serious damage to the electrical system or a fire could result.***

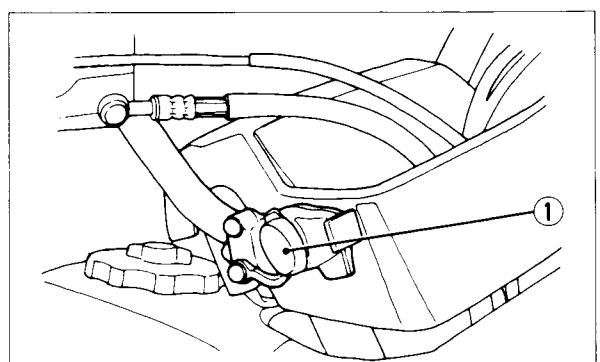

(1) 12V DC Receptacle

Accessories may be connected to the receptacle by using the special plug (2) that came with your BIG RED:

To attach the special plug to the accessory:

1. Attach the accessory leads to the plug, making sure to connect the positive and negative leads to the corresponding plug terminals.

CAUTION:

* *Do not install the positive and negative accessory leads in reverse when attaching them to the special plug.*

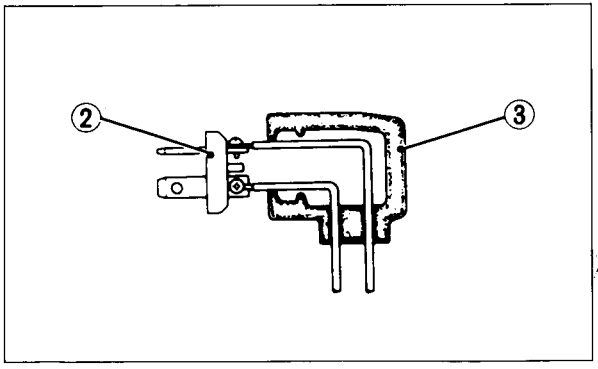

(2) Special plug (3) Plug cover

NOTE:

* We recommend that you use AWG18-AWG20 electrical wire for attachment to the special plug.

2. With the ignition OFF, insert the plug into the receptacle, being careful not to twist the electrical leads coming from the accessory.

⚠WARNING

* ***Make sure the ignition switch is OFF when inserting or removing the special plug.***

CAUTION:

* *Keep the electrical leads insulated and away from hot engine parts and sharp edges.*
* *Do not use accessories not designed for 12V DC power.*
* *Make sure the electrical leads extend from the bottom of the plug when inserting it in the receptacle.*

3. When the receptacle is not being used, cover it with the rubber cap that came with your BIG RED to keep out dust, water and sand.

Fuse Replacement

The fuse cases (1) containing the main (2), sub (2) and spare (3) fuses are located in the battery compartment. Both the main and sub fuses are 15A.

NOTE:

* The main fuse is connected to the red wire.

When frequent fuse failure occurs, it usually indicates a short circuit or an overload in the electrical system. See your authorized Honda dealer for repair.

To replace the fuse, open the fuse holder (4) and lift out the fuse with the clips (5). Slide the old fuse out of the clips and discard it. Slide the clips onto the ends of the new fuse, push them back into the fuse holder, and close the fuse holder.

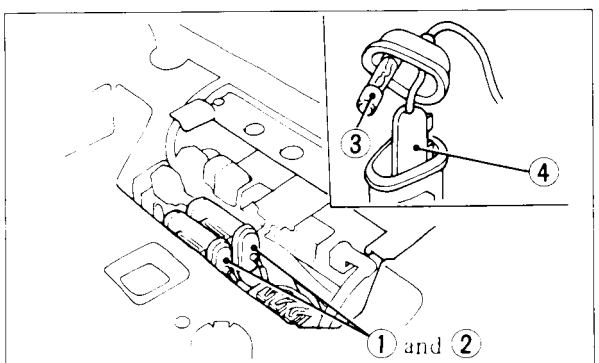

(1) Fuse cases
(2) Main and sub fuses
(3) Spare fuse
(4) Fuse holder

⚠WARNING

* ***Never use a fuse with a different rating from that specified. Serious damage to the electrical system or a fire may result, causing a dangerous loss of lights or engine power.***
* ***Do not pry the clips open to get a fuse out; you could bend them and cause poor contact with the new fuse. A loose fuse could cause damage to the electrical system and even start a fire.***

CAUTION:

* *Turn the ignition switch OFF before checking or replacing the fuse to prevent accidental short-circuiting.*

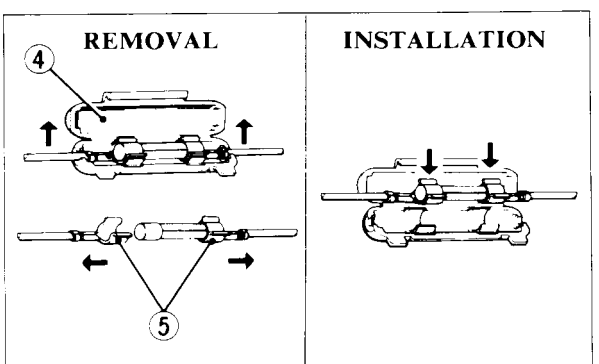

(4) Fuse holder
(5) Clips

Gearshift Pedal

The gearshift pedal is near the left footpeg. One full stroke of the gearshift pedal will shift the transmission. The pedal automatically returns to the horizontal position when released. Each stroke of the pedal engages the next gear in sequence.

Raise the pedal to upshift to a higher gear and depress the pedal to downshift.

When the reverse selector knob is pushed in and the rear brake lever is squeezed, the transmission can only be shifted from neutral to reverse gear by depressing the gearshift pedal.

CAUTION:

* *Bring the BIG RED to a complete stop before shifting the transmission into reverse. If the transmission is shifted into reverse when the vehicle is moving, damage to the transmission will result.*

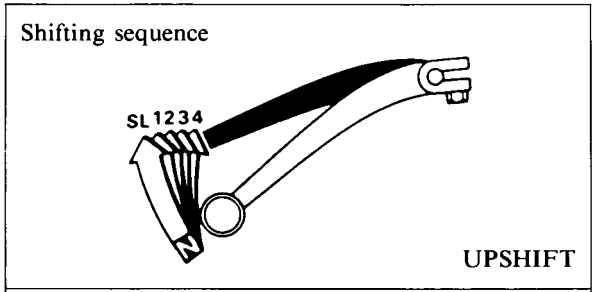

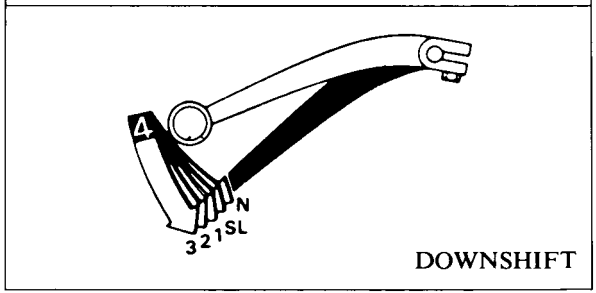

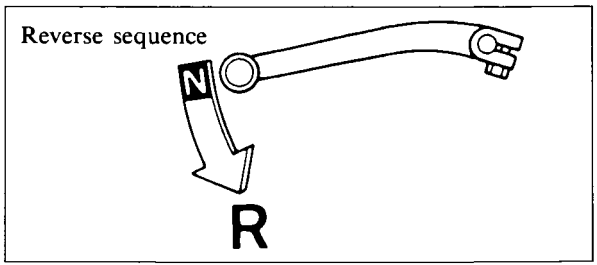

FUEL

Fuel Cock

The three way fuel cock (1) is on the left side of the fuel tank.

OFF

When the fuel cock is in the OFF position, fuel cannot flow from the tank to the carburetor. Turn the cock off whenever the BIG RED is not in use.

ON

When the fuel cock is in the ON position, fuel will flow from the main fuel supply to the carburetor only when the engine is being started or is running.

RES

When the fuel cock is in the RES position, fuel will flow from the reserve fuel supply to the carburetor. Use the reserve fuel only when the main supply is gone. Refill the tank as soon as possible after switching to RES. The reserve fuel supply is 2.5 ℓ (0.7 US gal).

NOTE:

* Do not operate the BIG RED with the fuel cock in the RES position after refueling. You may run out of fuel with no reserve.

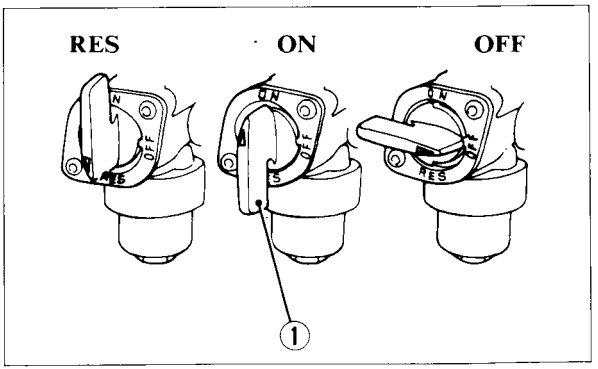

(1) Fuel cock

Fuel Tank

Fuel tank capacity is 12.5 ℓ (3.3 US gal) including 2.5 ℓ (0.7 US gal) in the reserve supply. Remove the fuel tank cap (1) by twisting it counterclockwise.

Automotive petrol with a pump octane number($\frac{R+M}{2}$) of 86 or higher, or research octane number of 91 or higher may be used.

If knocking or pinging occurs, try a different brand of petrol or a higher octane grade.

FOR AUSTRALIA:

Use unleaded fuel with a reserch octane number of 91 or higher.

CAUTION:

* *Should knocking or pinking persist while holding a steady speed on level ground, try changing brands of petrol. If knocking or pinking still persists, consult your authorized Honda dealer.*

After refueling, be sure to tighten the fuel cap firmly by turning it clockwise. Align the arrow (2) on the cap with the reference mark (3) on the fuel tank.

The fuel tank cap (1) has a fuel cap vent lever (4) with ON and OFF positions to open or close the tank vent. The lever should be turned to ON to allow fuel to flow when running the engine.

Turning the lever to OFF will prevent fuel from flowing out the vent hole when transporting the BIG RED.

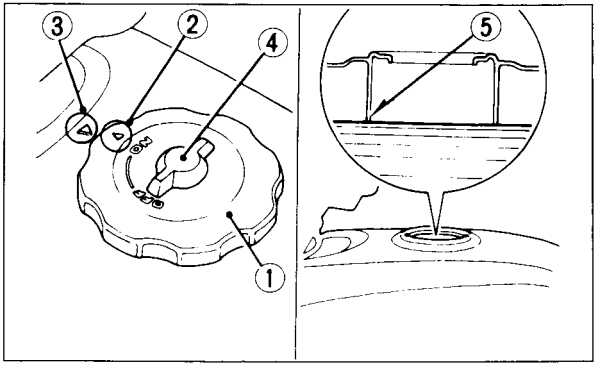

(1) Fuel tank cap
(2) Arrow
(3) Reference mark
(4) Fuel cap vent lever
(5) Filler neck

⚠WARNING

* ***Petrol is extremely flammable and is explosive under certain conditions.***
* ***Refuel in a well-ventilated area with the engine stopped. Do not smoke or allow flames or sparks in the area where the engine is refueled or where petrol is stored.***
* ***Do not overfill the tank (there should be no fuel in the filler neck). After refueling, make sure the tank cap is closed properly and securely.***
* ***Be careful not to spill fuel when refueling. Spilled fuel or fuel vapor may ignite. If any fuel is spilled, make sure the area is dry before starting the engine.***
* ***Avoid repeated or prolonged contact with skin or breathing of vapor. KEEP OUT OF REACH OF CHILDREN.***

Petrols Containing Alcohol

If you decide to use a petrol containing alcohol (gasohol), be sure it's octane rating is at least as high as that recommended by Honda. There are two types of "gasohol": one containing ethanol, and the other containing methanol. Do not use gasohol that contains more than 10% ethanol. Do not use petrol containing methanol (methyl or wood alcohol) that does not also contain cosolvents and corrosion inhibitors for methanol. Never use petrol containing more than 5% methanol, even if it has cosolvents and corrosion inhibitors.

NOTE:

* Fuel system damage or engine performance problems resulting from the use of fuels that contain alcohol is not covered under the warranty. Honda cannot endorse the use of fuels containing methanol since evidence of their suitability is as yet incomplete.
* Before buying fuel from an unfamiliar station, try to find out if the fuel contains alcohol. If it does, confirm the type and percentage of alcohol used. If you notice any undesirable operating symptoms while using a petrol that contains alcohol, or one that you think contains alcohol, switch to a patrol that you know does not contain alcohol.

ENGINE OIL

Engine Oil Level Check

Check the engine oil level each day before operating the BIG RED.

The oil filler cap/dipstick (1) is on the right crankcase cover and contains a dipstick for measuring the oil level. The oil level must be maintained between the upper (2) and lower (3) level marks on the dipstick.

To check the oil level:

1. Place the vehicle on level ground.
2. Start the engine and let it idle for a few minutes.
3. Stop the engine. After a few minutes, remove the oil filler cap/dipstick and wipe it clean, then reinsert the dipstick without screwing it in.
   The oil level should be between the upper (2) and lower (3) level marks on the dipstick.
4. If required, add the specified oil up to the upper level mark (2). Do not overfill.
5. Reinstall the oil filler cap/dipstick.

CAUTION:

* *Running the engine with insufficient oil can cause serious engine damage.*

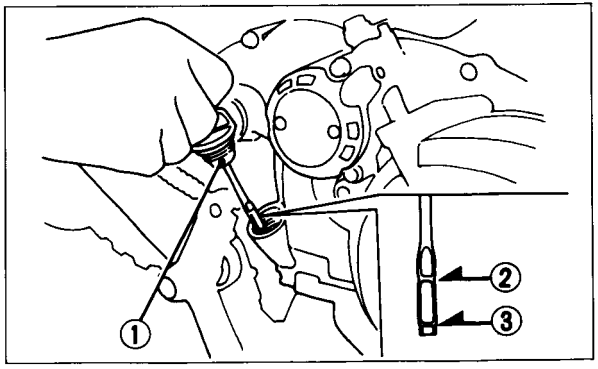

(1) Oil filler cap/dipstick (3) Lower level mark
(2) Upper level mark

Engine Oil Recommendation

USE HONDA 4-STROKE OIL OR AN EQUIVALENT.

Use only high detergent, premium quality motor oil certified to meet or exceed US automobile manufacturer's requirements for Service Classification SE or SF.

Motor oils intended for Service SE or SF will show this designation on the container. The use of special oil additives is unnecessary and will only increase operating expenses.

CAUTION:

* *Engine oil is a major factor affecting the performance and service life of the engine. Non-detergent, vegetable, or castor based racing oils are not recommended because they have inadequate lubricating characteristics.*
* *Do not use oils with graphite or molybdenum additives: they will adversely affect clutch operation.*

Recommended Oil Viscosity:
SAE 10W-40

Other viscosities shown in the chart below may be used when the average temperature in your riding area is within the indicated range.

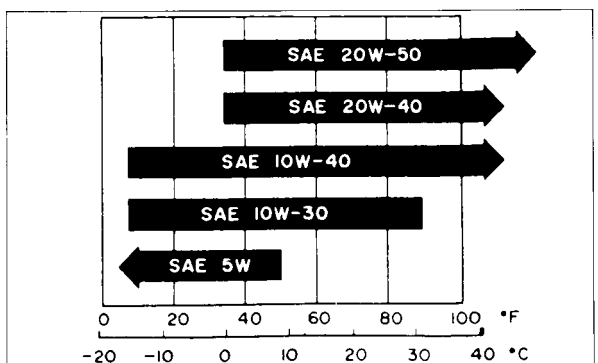

TYRES

This BIG RED is equipped with low pressure tubeless tyres to promote comfortable riding.
Although the tyres are designed specifically for vigorous off road use, they are not immune to punctures. Always select your riding area with care.

⚠WARNING

* ***The BIG RED is not designed to be driven on paved surfaces. Handling and control will be severely affected.***

Check the tyre pressure frequently with the air pressure gauge supplied with the BIG RED.
For normal use, the tyres should be inflated to the recommended pressure. A manually operated tire pump should be used rather than the high pressure systems found in service stations. This will minimize the possibility of tire damage from overinflation.

NOTE:

* Tyre pressure should be checked when the tyres are "cold," before you ride.

		Front	Rear
TYRE SIZE		AT 23 x 8-11★★	AT 24 x 9-11★
TYRE BRAND		A/T 504 Ohtsu	A/T 502 Ohtsu
NO CARGO	RECOMMENDED PRESSURE	4.4 psi (30 kPa, 0.30 kg/cm²)	2.9 psi (20 kPa, 0.20 kg/cm²)
	MAX. PRESSURE	5.0 psi (34 kPa, 0.34 kg/cm²)	3.3 psi (23 kPa, 0.23 kg/cm²)
	MIN. PRESSURE	3.8 psi (26 kPa, 0.26 kg/cm²)	2.5 psi (17 kPa, 0.17 kg/cm²)
WITH CARGO	RECOMMENDED PRESSURE	5.0 psi (34 kPa, 0.34 kg/cm²)	3.6 psi (25 kPa, 0.25 kg/cm²)

⚠WARNING

* ***Maintain proper tyre air pressure. Improperly inflated tyres may adversely affect maneuverability and may cause loss of control.***
* ***When replacing tyres, use only the size, type and brand identified in the chart. The use of different sizes or types of tyres can severely effect vehicle handling.***

If you have a flat tyre, use the plug method to make temporary repairs. The plug method is the same as that for conventional tubeless tyres. A plug type repair kit, which is available at most auto part stores or service stations, provides a plug, an installation tool, tyre cement, and an instruction sheet. Follow the instructions provided in the repair kit to make a temporary repair until the tyre can be permanently repaired by the cold patch method. Any tyre which cannot be repaired by the plug method should be replaced.

Whenever the BIG RED is to be operated far from service facilities or available transportation, we recommend that the rider carry a tyre pump and a suitable tyre repair kit with the BIG RED.

Tyer Tread Condition

Measure the groove depth (1) of tyres at the center or check the wear indicator (2) on the tyre as shown. Operating the vehicle with excessively worn tyres will decrease traction and cause skidding.

⚠WARNING

* ***Replace tyres before tread depth at the center of the tyres reaches the minimum or if the tyre has wear indicators when the surface is flush with the wear indicators.***

Minimum tread depth
4mm (0.16 in)

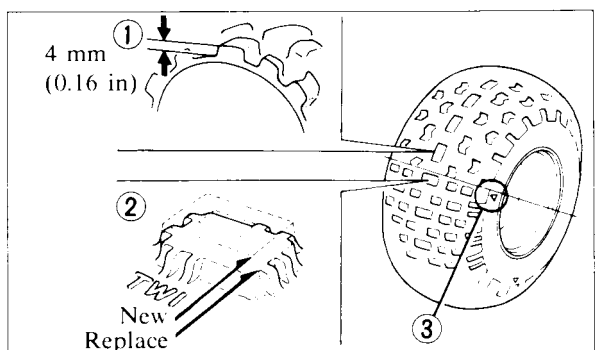

(1) Groove depth
(2) Wear indicator
(3) Wear indicator location mark

BATTERY

It is not necessary to check the battery electrolyte level or add distilled water as the battery is a maintenance-free (sealed) type. If the battery seems weak (causing hard starting or other electrical troubles), contact your authorized Honda dealer.

⚠WARNING

* ***The battery gives off explosive gases; keep sparks, flames and cigarettes away. Provide adequate ventilation when charging or using the batteries in an enclosed space.***
* ***The battery contains sulfuric acid (electrolyte). Contact with skin or eyes may cause severe burns. Wear protective clothing and a face shield.***
  - ***If electrolyte gets on your skin, flush with water.***
  - ***If electrolyte gets in your eyes, flush with water for at least 15 minutes and call a physician immediately.***
* ***Electrolyte is poisonous.***
  - ***If swallowed, drink large quantities of water or milk and follow with milk of magnesia or vegetable oil and call a physician.***
* ***KEEP OUT OF REACH OF CHILDREN.***

CAUTION:

* *Do not attempt to remove the sealing caps from the cells — you may damage the battery.*
* *When the BIG RED is to be stored for an extended period of time, remove the battery from the vehicle and charge it fully. Then store it in a cool, dry place. If the battery is to be left in the vehicle, disconnect the negative cable from the battery terminal.*

PRE-RIDE INSPECTION

⚠WARNING

* ***If the Pre-ride Inspection is not performed, severe personal injury or vehicle damage may result.***

Inspect your BIG RED every day before you ride it. The items listed here will only take a few minutes to check and in the long run can save time, expense, and possibly your life.

1. Engine oil level—if required, add engine oil (pages 24-25). Check for leaks.
2. Fuel level —fill the fuel tank when necessary (pages 21-23). Check for leaks.
3. Brakes—check operation; make sure there is no brake fluid leakage. If necessary, adjust free play (pages 64-69).
4. Tyres—check condition and pressure (pages 26-27).
5. Throttle—check for smooth opening and closing in all steering positions (page 51).
6. Headlight and headlight dimmer switch—check for proper function (page 12).
7. Engine stop switch—check for proper function (page 11).
8. Driveshaft boots—check for damage (page 72).
9. Nuts, Bolts, Fasteners—check the wheels to see that the axle nuts are tightened and secured by cotter pins. Check the security of all other nuts, bolts and fasteners.
10. Steering—check that the wheels turn properly as you steer the handlebar.
11. Check that all cargo is properly secured.

Correct any discrepancy before you ride. Contact your authorized Honda dealer for assistance if you cannot correct the problem.

STARTING THE ENGINE

⚠WARNING

* ***Never run the engine in a closed area. The exhaust contains poisonous carbon monoxide gas that can cause loss of consciousness and may lead to death.***
* ***Do not try to start the engine with the transmission in gear. You may injure yourself or damage the vehicle.***

Preparation

1. Select a level surface and lock the parking brake (page 15) before starting the engine.
2. Turn the fuel cock (1), fuel cap vent lever (2) and ignition switch (3) to ON.
3. Make sure the transmission is in neutral by checking that the neutral indicator lamp (4) is on and the engine stop switch (5) is at RUN.

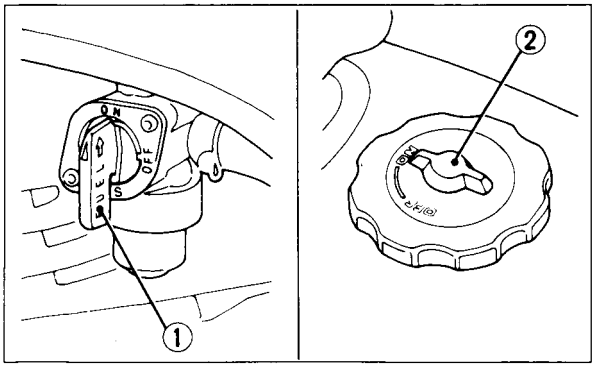

(1) Fuel cock (2) Fuel cap vent lever

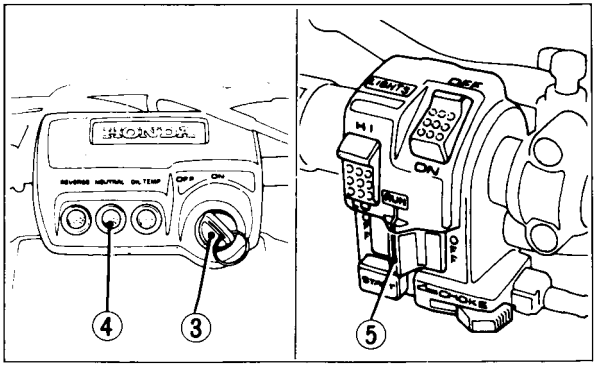

(3) Ignition switch (5) Engine stop switch
(4) Neutral indicator lamp

Starting Procedure (After Preparation)

To restart a warm engine, follow the procedure for High Air Temperature.

CAUTION:

* *Do not push the starting primer knob under Normal Air Temperature or High Air Temperature, or the engine will be flooded with excess fuel. This will result in engine starting difficulties.*

Normal Air Temperature
10°—35°C (50°—95°F):

1. While pushing the choke lever (6) in, move it to detent position "B."
2. Keep the throttle fully closed.
3. Press the starter button (7) and start the engine.

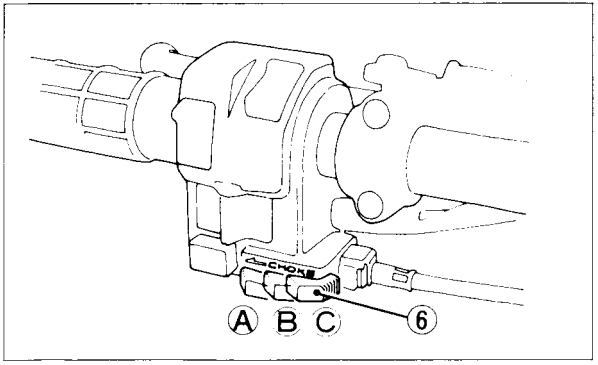

(6) Choke lever

NOTE:

* Do not use the electric starter for more than 5 seconds at a time. Release the starter button for approximately 10 seconds before pressing it again.
* To prevent a weak or discharged battery, use the kickstarter if you encounter any difficulty in cranking the engine with the starter motor.
* The starter motor will operate only when the transmission is in neutral.

4. After the engine starts, continue warming up the engine until it will idle smoothly with the choke lever in detent position "B." Then push the choke lever all the way to "Off" position (C). If idle is instable open the throttle slightly.

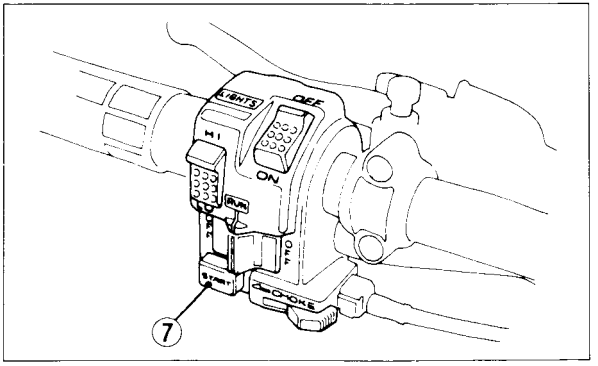

(7) Starter button

High Air Temperature
35°C (95°F) or above:

1. Do not use the choke.
2. Open the throttle slightly.
3. Start the engine by pressing the starter button.

Low Air Temperature
10°C (50°F) or below:

1. While pushing the choke lever (6) in, move it all the way to "On" position (A).

NOTE:

* Below −15°C (5°F):
  Push the starting primer knob (8) one or two times before pressing the starter button.

2. Keep the throttle fully closed.
3. Press the starter button (7) and start the engine.
4. As soon as the engine starts, the idle will be high. When it decreases slightly and becomes unsteady, move the choke lever (6) to detent position "B."
5. Continue warming up the engine until it will idle smoothly with the choke lever in detent position "B." Then move the choke lever all the way to "Off" (C). If idle is instable, open the throttle slightly.

CAUTION:

* *Extended use of the choke may impair piston and cylinder wall lubrication and shorten the engine life.*
* *Do not race the engine during the warm-up period. Racing a cold engine wastes fuel and increases engine wear.*

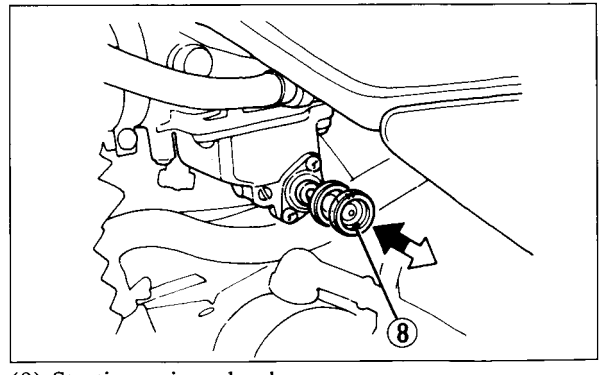

(8) Starting primer knob

Kick Starting

Operate the kickstarter with the decompressor lever to start the engine.

1. Remove the right side cover (1) and follow the steps under Preparation (page 30).
2. While pushing the choke lever in, move it all the way to the "On" position.

NOTE:

* Do not use the choke when restarting a warm engine or when air temperature is 35°C (95 °F) or above.

3. Raise the decompressor lever (2) to the "Decomp" position (A).
4. Starting from the top of the stroke, operate the kickstarter (3) through to the bottom with a rapid, continuous motion.
   The decompressor lever automatically returns to the lowered position when the kickstarter is operated.

NOTE:

* The engine will start only when the transmission is in neutral.

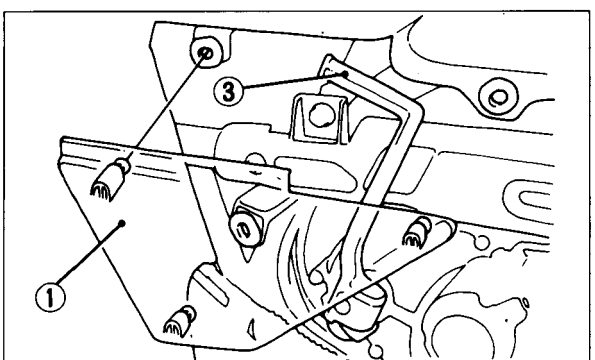

(1) Right side cover (3) Kickstarter

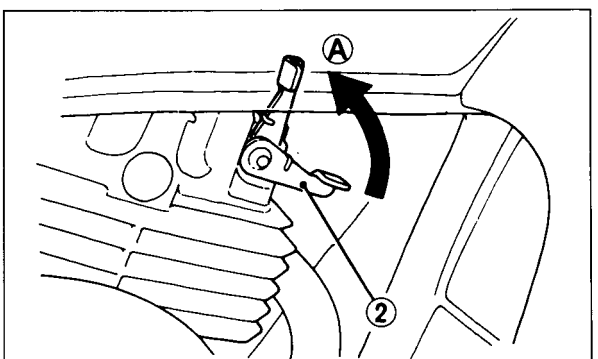

(2) Decompressor lever (A) "Decomp" position

Flooded Engine

If the engine does not start after several attempts, it may have become flooded with excess fuel. To clear the engine, turn the engine stop switch OFF, move the choke lever all the way to "Off," hold the throttle fully open, and briefly press the starter button or operate the kickstarter several times.

When the engine is cleared, wait 10 seconds, then turn the engine stop switch ON and repeat the normal starting procedure, but do not use the choke.

RUNNING-IN

During the first few days of riding, operate your new BIG RED so that the engine neither pulls laboriously nor approaches maximum rpm in any gear. Avoid full throttle operation, and shift gears frequently to vary engine speed. A careful running-in procedure during the initial operating period will measurably extend the service life of the engine.

RIDING

⚠ WARNING

* ***Review BIG RED Safety (pages 1-6) before you ride.***
* ***Avoid "wheelies" and jumping as they may cause loss of control.***
* ***Ride with your feet on the footpegs at all times. If your feet are removed from the footpegs and touch the ground while the BIG RED is moving, they may come in contact with the rear wheels, causing injury.***
* ***The BIG RED is not designed to be ridden on paved surfaces. Handling and control will be severely affected.***
* ***While carrying loads or pulling a trailer, use extreme caution when starting, stopping or turning the BIG RED.***

For your initial riding practice, select a safe area free of obstacles with a level surface of dirt or sand.

1. Make sure the transmission is in neutral and set the parking brake
2. After the engine has been warmed up, release the parking brake. The BIG RED is ready for riding.
3. While the engine is idling, raise the gearshift pedal to shift into SL (Super-low) gear.
4. Increase engine speed by gradually opening the throttle.
5. When your speed increases, close the throttle and shift to 1st gear by raising the gearshift pedal.

CAUTION:

* *Do not shift gears without closing the throttle. The engine and drive train could be damaged by overspeed and shock.*

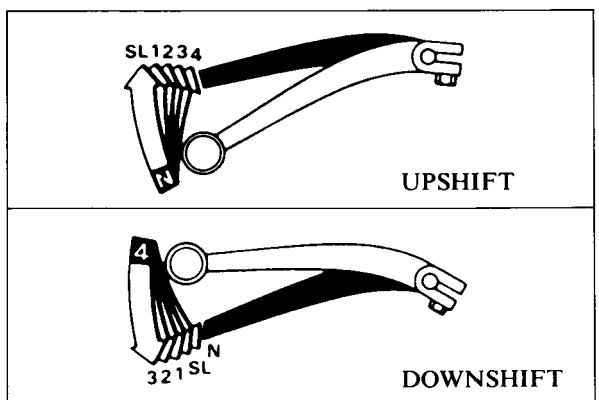

Shifting sequence

6. This sequence is repeated to progressively shift to 2nd, 3rd and 4th (top) gear.

CAUTION:

* *Do not tow the BIG RED or coast for long distances while the engine is off. The transmission will not be properly lubricated and damage may result.*

Reverse Riding

When practicing riding in reverse, first make sure there are no obstacles or people in the area.

1. Make sure the transmission is in neutral and set the parking brake.
2. Start the engine and release the parking brake.
3. While the engine is idling, press the reverse selector knob, squeeze the rear brake lever and depress the gearshift pedal into the reverse gear.
4. Release the rear brake lever.
5. Ride the BIG RED cautiously in reverse by gradually opening the throttle.

⚠ WARNING

* ***When backing up, open the throttle carefully to ride slowly and safely, being careful that there are no obstacles or people behind you.***
* ***Avoid sudden application of the throttle or abrupt turns, loss of vehicle control could occur.***
* ***Close the throttle and apply both front and rear brakes carefully to stop the BIG RED when riding in reverse. Applying the rear brake alone may cause the front wheels to lift off the ground.***
  Remember the right hand brake lever applies the rear brake also.
* ***Make sure the neutral indicator light comes on after shifting the transmission from reverse into neutral. If the neutral indicator light does not come on, move the BIG RED and then try to shift the transmission into neutral again.***

Turning Maneuvers

For better traction in off road use, the BIG RED has been fitted with a rear axle which drives both rear wheels equally at all times.

When negotiating a turn, the wheels on the outside of the turn must travel a wider radius and the inside wheels must slip a little relative to the ground. To permit the inside wheels to have less traction, the rider must slightly shift their weight to the outside wheels. So, it may not be enough to merely steer the BIG RED into a turn. The new rider must learn to shift his or her weight and control the throttle to help the vehicle to negotiate the turn.

This is an important technique to be mastered in riding the Honda BIG RED. For your initial riding practice, operate the BIG RED in low gear.

Practice turning the BIG RED at slow, constant speeds. Defer higher speeds until you are confident of your proficiency.

To turn, steer in the direction of the turn, leaning your body to the inside of the turn, while supporting your weight on the outer footpeg. Use the throttle to maintain power throughout the turn.

This technique allows the BIG RED to lean slightly toward the outstide, altering the balance of traction between the inside and outside wheels sufficiently to allow them to negotiate the turn.

Once this technique is learned, turning maneuvers can be performed within a relatively small area.

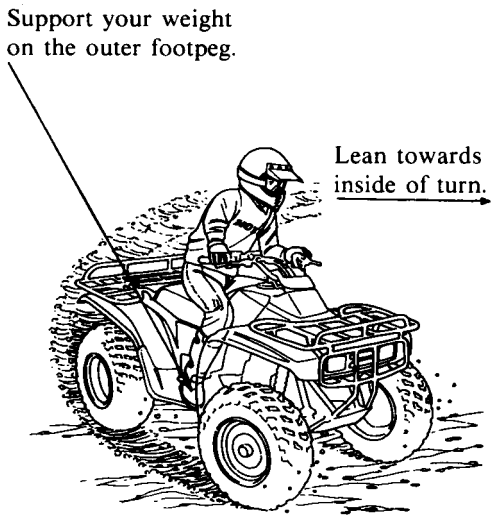

Incorrect turning techniques may cause the front wheels to slide straight ahead when steered without affecting the BIG RED's direction of travel. If this should occur, close the throttle and come to a stop. Then continue practicing the technique outlined on the preceding page.

If the front wheels tend to skid in mud or snow, you may be able to improve control under these conditions by leaning forward, transferring additional weight to the front wheels.

If the rear wheels inadvertently skid sideways, correct your slide by steering in the direction of the skid if you have room to perform this maneuver safely. Avoid braking or accelerating until you have regained directional control.

To avoid skids while traveling on slippery terrain, the rider must exercise a high degree of caution. Controlled skids and spins, when performed safely, add to the sport the rider can enjoy. However, as skidding maneuvers are inherently more hazardous than those performed under full traction, we must caution the rider to first master the basic techniques of handling before practicing any skidding maneuver.

Surface composition is, of course, a major factor affecting skidding capability. It is obviously easier to slide on packed snow than in deep sand. Surfaces with extremely low or extremely high coefficients of friction must not be used for skidding maneuvers. It is dangerous to skid on ice, because you may lose all directional control, and it is dangerous to skid on pavement, because you may regain traction suddenly and unexpectedly, which can cause you to lose your balance and overturn.

Climbing Hills

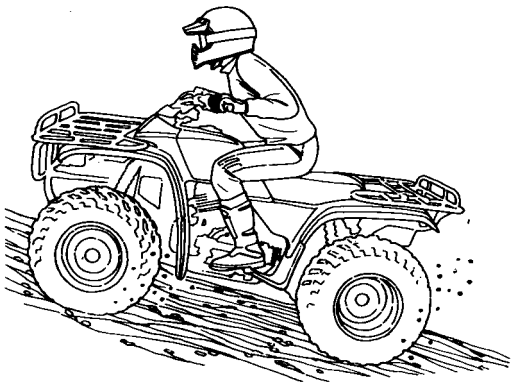

Practice climbing on evenly surfaced slopes of less than 20 degrees. The BIG RED's capability in climbing hills or traversing any specific terrain is dependent upon rider skill. As you gain experience in handling the BIG RED and learn the hazards to be encountered and your own limitations, you may then proceed to ride more challenging terrain. However, you must first be able to discern and avoid any hill or hazard that would cause the BIG LED to overturn.

The riding technique for hill climbing involves transferring your weight toward the front wheels to keep it in contact with the ground. This may be done by leaning forward, or for greater weight transference, by standing on the footpegs and leaning forward.

Take a running start in the appropriate gear and speed for the ascent, and climb at a steady rate of speed.

⚠ WARNING

* ***Do not apply power suddenly by opening the throttle or changing gears while ascending a hill, or the front wheels may rise from the ground. If the front wheels lift, rider control will be lessened and the BIG RED may overturn backward.***
* ***Hills should not be crested at high speed. Once over the top of the hill, you may lose control or be thrown from the BIG RED.***

If you should find that you have incorrectly estimated your climbing capability and lack the power or traction to continue the ascent, then turn the BIG RED around if space permits, while you still have the forward speed to do so and descend. Avoid stalling part way up a hill, as maneuvering will then become much more difficult.

⚠ WARNING

* ***Before attempting a turn on a hillside, the rider should first master turning techniques on level ground.***

If you do lose all forward speed and can neither continue uphill nor maneuver the BIG RED under its own power, stop the BIG RED, apply the parking brake and assess the situation. Dismount and physically turn the machine around from the uphill side. If necessary, have someone help you turn the vehicle around. If it cannot be turned and must be backed down, first shift the transmission into neutral. Always go very slowly and under control when backing down a steep hill. Do not let the vehicle roll backwards freely. Again, we strongly recommend that the rider turn the BIG RED around rather than back it downhill.

⚠ WARNING

* ***To avoid overturning, the rider must exercise a high degree of caution when dismounting or moving the BIG RED on a hillside.***
* ***Applying the front and rear brakes or engaging the transmission while rolling backward downhill can easily cause the BIG RED to overturn and fall on the rider, so speed must be controlled with great caution.***

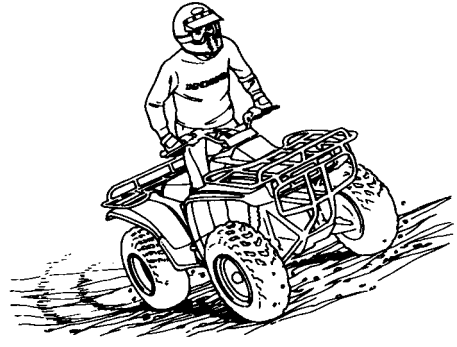

⚠ WARNING

* ***Adding cargo or towing a trailer will greatly reduce your ability to climb hills or turn around on a hill safely. Be sure to load the cargo in the middle of the carrier, and toward the center of the vehicle, and use caution.***

Descending Hills

It is usually advisable to descend hills with the BIG RED pointed directly downhill, avoiding angles that would cause the vehicle to lean sharply to one side. As you approach the point of descent, stop and survey the terrain below. Never ride headlong past the limit of your visibility. When you have picked a safe path of descent, shift the transmission into low gear and descend slowly with the throttle closed. Sit back on the seat, with arms extended and braced on the handlebars. When descending sand dunes, you should apply the brake intermittently to further reduce forward speed. Braking effectiveness is, of course, reduced while descending any incline with a loose surface.

⚠WARNING

* ***Use the front brake cautiously when descending a hill. Hard or sudden application of the front brake could cause the BIG RED to overturn.***
* ***Use caution when applying the rear brake going downhill. Four wheel drive interconnects all wheels, so applying the left hand brake lever or brake pedal will brake the front wheels.***
* ***Do not reduce power suddenly by closing the throttle or downshifting while descending a hill, or the rear wheels may rise off the ground. If the rear wheels lift, the vehicle may turn or pitch over, out of control.***
* ***Adding cargo or towing a trailer will greatly reduce your ability to descend hills safely. Be sure to load the cargo in the middle of the racks, and toward the center of the vehicle.***

Traversing Slopes

When riding across a slope at right angles to the incline of the hill, lean your body uphill to maintain balance and stability. On a loose surface such as sand, it may become necessary to steer slightly uphill as part of maintaining your course of travel.

⚠ WARNING

* ***Balance is more precarious while the BIG RED is tilted to one side. Avoid traversing slopes where there is slippery or difficult terrain.***
* ***Adding cargo will greatly reduce your ability to traverse slopes safely. Do not traverse slopes when towing a trailer.***

Riding Through Water

⚠WARNING

* ***Do not ford any stream with fast flowing water. The tires may float, making it difficult to maintain control.***
* ***Do not ride the BIG RED through water beyond its limit; directional control may be impaired.***

The Honda BIG RED can ford water to a depth of approximately 11 inches, although the rider must be careful to avoid getting the spark plug or air cleaner wet.

When crossing streams, choose a course where both banks have gradual inclines. Proceed at a slow, steady speed, and take care to avoid submerged obstacles and slippery rocks.

After riding through water, the brakes could be less effective than normal. Test the front and rear brakes after traveling through any water, and if necessary, apply the brakes repeatedly until the heat of friction has dried them, and the brakes regain their normal effectiveness.

If they do not dry out and regain their effectiveness, stop the BIG RED and shut the engine OFF. Position a front wheel so its inspection hole plug (1) is at the bottom. Set the parking brake ON and drain any trapped water by removing the inspection hole plug (1) or drain bolt (2) from the bottom of the brake cover.

CAUTION:

* *If any water drains, it is an indication that the brake seals must be replaced. Have these seals checked by your authorized Honda dealer as soon as possible.*

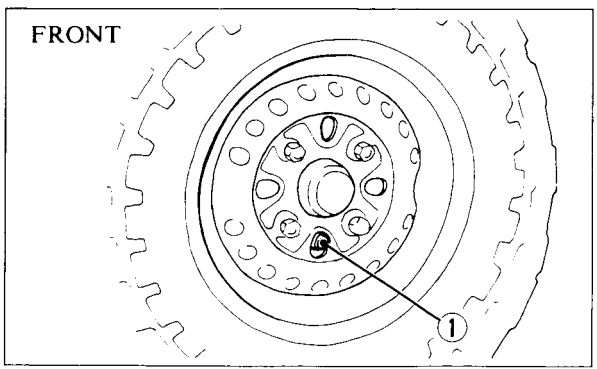

(1) Inspection hole plug

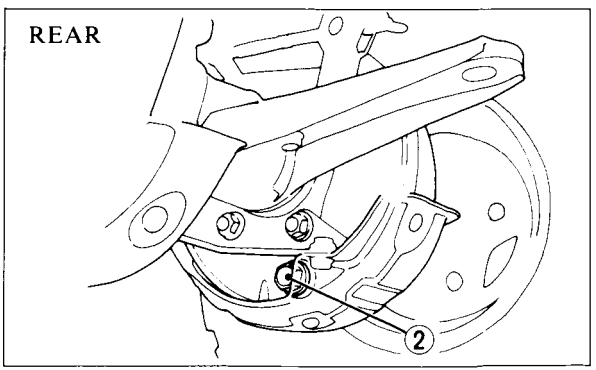

(2) Drain bolt

High Altitude Riding

When operating this vehicle at high altitudes, the air-fuel mixture becomes overly rich. Between 3,000—8,000 feet (1,000—2,500 m) driveability and performance may be reduced and fuel consumption increased. The carburetor can be modified to compensate for this high altitude richness. However, the carburetor must be returned to standard factory specifications when lower altitude riding is desired. (page 61).

CAUTION:

* *Sustained operation at altitudes below 5,000 feet (1,500 m) with high altitude carburetor modifications may cause engine overheating and damage.*

PARKING

1. Stop the vehicle, shift the transmission into neutral, making sure that the neutral indicator light is on, turn the fuel cock, fuel cap vent lever and ignition switch OFF.
2. Pull the parking brake lever and lock it. (page 15).

⚠ WARNING

* ***Do not park on an incline. If you must park on a hill, place the BIG RED across the incline so that it neither faces downhill nor uphill.***

MAINTENANCE SCHEDULE

Perform the Pre-ride Inspection (Page 29) at each scheduled maintenance period.

I: Inspect and Clean, Adjust, Lubricate or Replace if necessary. C: Clean R: Replace A: Adjust L: Lubricate		EVERY	INITIAL SERVICE PERIOD (First week of operation)	REGULAR SERVICE PERIOD (Every 30 operating days)	Refer to page
*	FUEL LINE	YEAR I			—
*	FUEL STRAINER SCREEN	YEAR C			50
*	THROTTLE OPERATION		I	I	51
*	CARBURETOR CHOKE			I	58
	AIR CLEANER	(NOTE 1)		C	52
	AIR CLEANER CASE DRAIN TUBE			I	53
	SPARK PLUG			I	54
*	VALVE CLEARANCE		I	I	55-56
	ENGINE OIL		R	R	24-25
	ENGINE OIL FILTER		R	R	57
	ENGINE FRONT GEAR CASE	YEAR I 2 YEARS R			62
*	CARBURETOR IDLE SPEED		I	I	59
	FINAL DRIVE OIL	2 YEARS R			63
	BRAKE FLUID	2 YEARS *R		I	65-66

I: Inspect and Clean, Adjust, Lubricate or Replace if necessary. C: Clean R: Replace A: Adjust L: Lubricate		EVERY	INITIAL SERVICE PERIOD (First week of operation)	REGULAR SERVICE PERIOD (Every 30 operating days)	Refer to page
*	BRAKE SHOE WEAR	YEAR I (NOTE 2)			68
	BRAKE SYSTEM		I	I	64-69
*	REVERSE LOCK SYSTEM		I	I	70
*	CLUTCH SYSTEM		I	I	69
	ENGINE GUARD, SKID PLATES			I	70
*	SUSPENSION			I	—
*	NUTS, BOLTS, FASTENERS		I	I	—
**	WHEELS/TYRES		I	I	—
**	STEERING SHAFT HOLDER BEARINGS	YEAR I			—
**	STEERING SYSTEM	YEAR I			—

* SHOULD BE SERVICED BY YOUR AUTHORIZED HONDA DEALER, UNLESS THE OWNER HAS PROPER TOOLS AND SERVICE DATA AND IS MECHANICALLY QUALIFIED. REFER TO THE OFFICAL HONDA SERVICE MANUAL.

** IN THE INTEREST OF SAFETY, WE RECOMMEND THESE ITEMS BE SERVICED ONLY BY YOUR AUTHORIZED HONDA DEALER.

NOTES: 1. Service more frequently when riding in dusty areas, sand or snow.
2. Service more frequently after riding in very wet or muddy conditions.

MAINTENANCE PRECAUTIONS

⚠WARNING

* ***Always turn the engine off before performing any maintenance operations unless otherwise stated.***
* ***To maintain the safety and reliability of your HONDA BIG RED do not modify it and use only new genuine HONDA parts or their equivalent when servicing or repairing.***
  The use of replacement parts which are not of equivalent quality may impair the operation of your BIG RED.

TOOL KIT

The tool kit (1) is stored in the storage compartment behind the seat. The tools provided are sufficient to perform routine maintenance and simple repairs. Any extensive work requiring additional tools should be performed by your authorized Honda ATV dealer. Listed below are the items included in the tool kit.

- Standard/Phillips screwdriver
- Screwdriver handle
- 10 x 12 mm Open end wrench
- 14 x 17 mm Open end wrench
- Pliers
- Spark plug wrench
- Handlebar
- Tool case

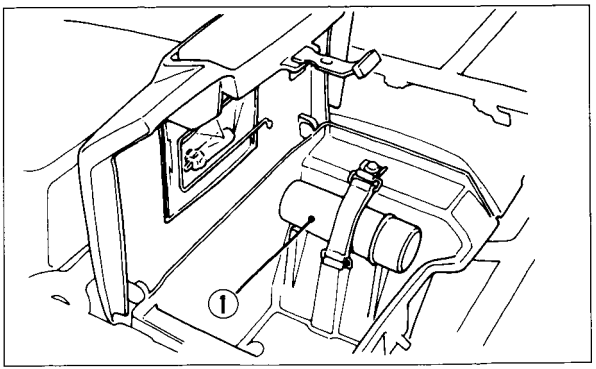

(1) Tool kit

FUEL STRAINER SCREEN

The fuel strainer is in the fuel cock. The fine mesh screen of the strainer prevents dirt from entering the carburetor passages. Dirt which accumulates in the fuel strainer must be removed periodically, or the fuel flow will eventually be restricted.

⚠WARNING

* ***Petrol is extremely flammable and is explosive under certain conditions. Perform this operation in a well-ventilated area with the engine stopped. Do not smoke or allow open flames or sparks in the area or where petrol is stored.***

1. Turn the fuel cock OFF.
2. Remove the fuel strainer cup (1).
3. Remove the filter screen (2).
4. Wash the screen in non-flammable or high flash point solvent.

⚠WARNING

* ***Never use petrol or low-flash point solvents for cleaning the fuel strainer. A fire or explosion could result.***

5. Reassemble by reversing the disassembly sequence.
6. Turn the fuel cock and fuel cap vent lever ON, and check for leaks. Correct if necessary.

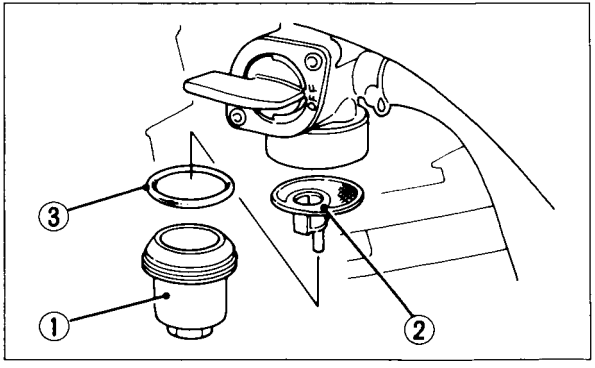

(1) Fuel strainer cup (3) O-ring
(2) Filter screen

THROTTLE OPERATION

Inspect the throttle cable for condition and operation. The cable must not bind or impair smooth operation of the throttle lever in any steering position. Replace the cable if it has become worn or kinked. Lubricate the cable with a commercially available cable lubricant to prevent premature wear and corrosion. Free play, measured at the tip of the throttle lever (1), should be maintained at 3—8 mm (1/8—5/16 in).

The cable adjuster (2) is located near the right grip. Slide the rubber sleeve (3) back to expose the throttle cable adjuster (2). Loosen the lock nut (4) and turn the adjuster to obtain the correct free play. Tighten the lock nut and reinstall the sleeve after adjustment.

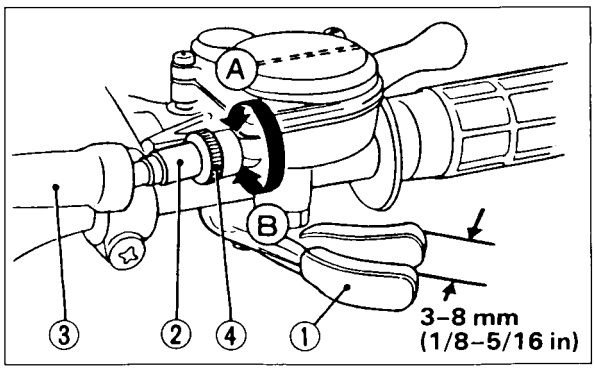

(1) Throttle lever
(2) Cable adjuster
(3) Rubber sleeve
(4) Lock nut
(A) Decrease free play
(B) Increase free play

AIR CLEANER

The air cleaner element accumulates dust and must be cleaned periodically. If the BIG RED is ridden in dusty areas, the element must be cleaned at more frequent intervals than specified in the MAINTENANCE SCHEDULE on page 47.

To clean the filter element:

1. Remove the seat by pulling the lever (1).
2. Remove the four retainer clips (2) securing the air cleaner cover.
3. Remove the screws (3), holder (4) and then air cleaner assembly from the case.
4. Remove the filter element (5) from the air cleaner body (6), wash it in non-flammable or high flash point solvent and allow it to dry thoroughly.

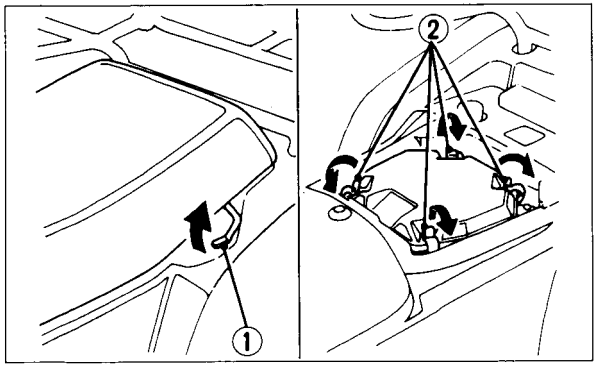

(1) lever (2) Retainer Clips

⚠WARNING

* ***Never use petrol or low flash point solvents for cleaning the air cleaner element. A fire or explosion could result.***

5. Soak the filter element in clean gear oil (SAE 80 —SAE 90) until saturated, then squeeze out the excess oil.

CAUTION:

* *Do not twist the filter element when squeezing the excess oil from the filter element. Damage to the filter element could result.*

6. Reassemble by reversing the disassembly sequence.

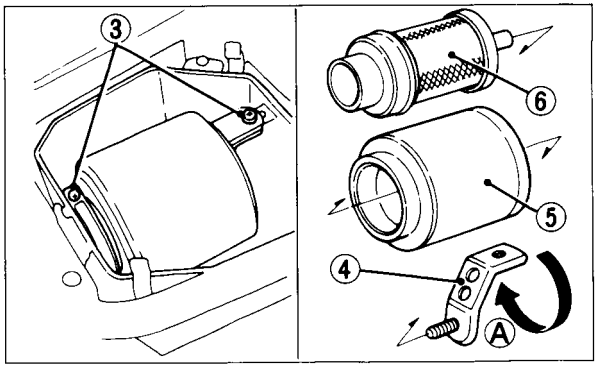

(3) Screws (5) Filter element
(4) Holder (6) Air cleaner body
(A)Release

AIR CLEANER CASE DRAIN TUBE

The drain tube (1) should be serviced in accordance with the MAINTENANCE SCHEDULE on page 47. If deposits can be seen in the drain tube, the drain tube must be cleaned before starting the vehicle.

1. Remove the drain tube (1) by removing the clip (2) and drain the deposits.
2. Reinstall the drain tube with the clip.

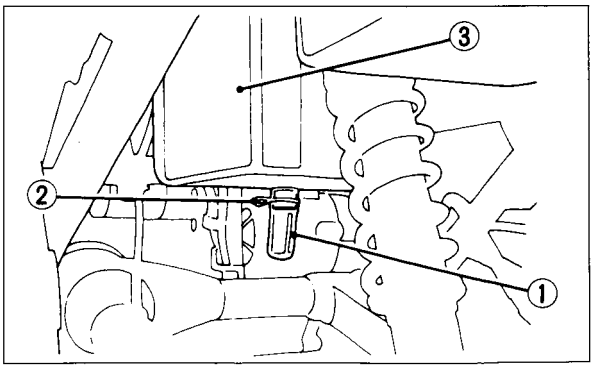

(1) Drain tube
(2) Clip
(3) Air cleaner case

SPARK PLUG

Standard spark plug:
DPR8EA-9 (NGK) X24EPR-U9(ND)

CAUTION:

* *The use of spark plugs of incorrect size or heat range can cause serious engine damage.*

1. Disconnect the spark plug cap.
2. Clean any dirt from around the spark plug base.
3. Remove the plug with the wrench provided in the tool kit.
4. Visually inspect the spark plug electrodes for wear. The center electrode should have square edges and the side electrode should not be eroded. If the electrodes and insulator tip appear unusually fouled or burned, we suggest that you contact your authorized Honda dealer.
   Discard the spark plug if there is apparent wear or if the insulator is cracked or chipped.
5. Make sure that the spark plug gap is 0.8—0.9 mm (0.031—0.035 in) using a wire-type feeler gauge. If adjustment is necessary, bend the side electrode (1) carefully.
6. With the plug washer attached, thread the spark plug in by hand to prevent cross-threading.
7. Tighten a new spark plug, 1/2 turn with the spark plug wrench to compress the washer. If you are reusing a plug, it should only take 1/8—1/4 turn after the plug seats.

CAUTION:

* *The spark plug must be securely tightened. An improperly tightened plug can become very hot and possibly damage the engine.*

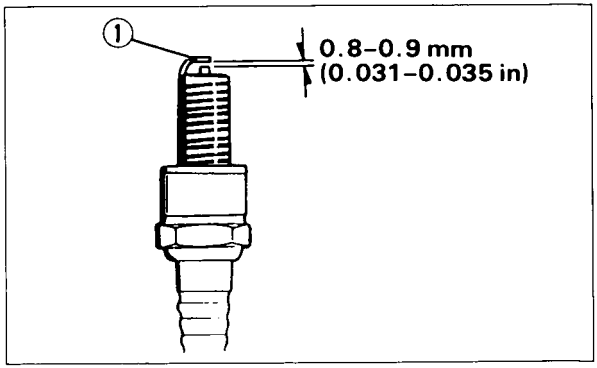

(1) Side electrode

VALVES

Valve clearance should be maintained at 0.15 mm (0.006 in). Excessive clearance will cause noise. Insufficient clearance will cause loss of power and could cause valve damage.

NOTE:

* To adjust valve clearances, the fuel tank must be removed. Please refer to the Honda Service Manual or have this work done by your authorized Honda dealer.
* Check and adjust valve clearance while the engine is cold. The clearance will change as the temperature rises.

1. Turn the fuel cock and fuel cap vent lever OFF.
2. Remove the fuel tank (see NOTE above).

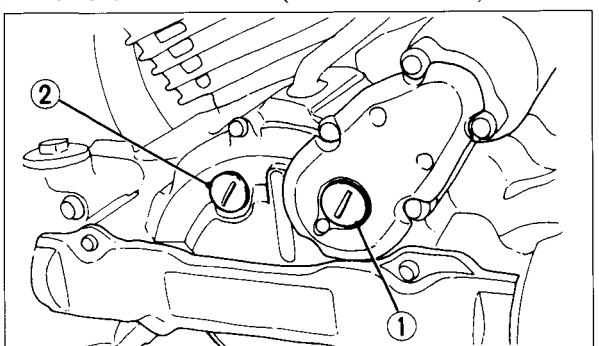

(1) Reduction shaft hole cap

(2) Timing mark hole cap

⚠WARNING

* ***Petrol is extremely flammable and is explosive under certain conditions. Perform this operation in a well-ventilated area with the engine stopped. Do not smoke or allow open flames or sparks in the area or where petrol is stored.***

3. Remove the reduction shaft hole cap (1) and timing mark hole cap (2)
4. Remove the valve adjuster covers.
5. Rotate the reduction shaft counterclockwise using a 6 mm hex wrench (optional tool) until the "T"mark (3) on the alternator rotor aligns with the timing index mark (4) on the cover. In this position, the piston may either be on the compression or the exhaust stroke. The adjustment must be made when

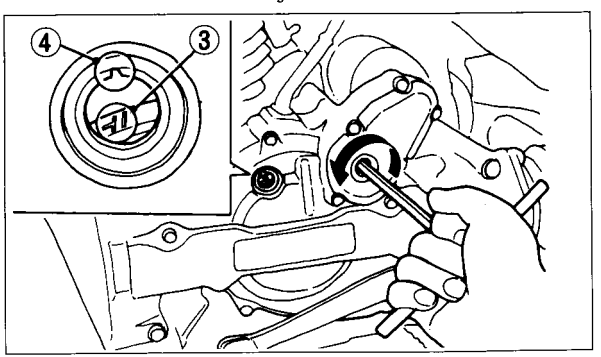

(3) "T" mark

(4) Index mark

the piston is on the top of the compression stroke and both the intake and exhaust valves are closed. This can be determined by moving the rocker arms by hand. If they are free, it is an indication that the valves are closed and that the piston is on the compression stroke. If they are tight and the valves are open, rotate the reduction shaft 360° (one complete revolution) counterclockwise and realign the "T"mark (3) to the timing index mark (4).

6. Check the clearance of both valves by inserting a 0.15mm (0.006 in) feeler gauge (5) between the adjusting screw and valve stem.
7. If adjustment is necessary, loosen the adjusting screw lock nut (6) and turn the screw (7) so that there is a slight resistance when the feeler gauge (5) is inserted.
8. After adjustment, tighten the lock nut while holding the adjusting screw to prevent it from turning.
9. Recheck the clearance to make sure that it has not changed.
10. Reinstall the removed parts in the reverse order of removal.

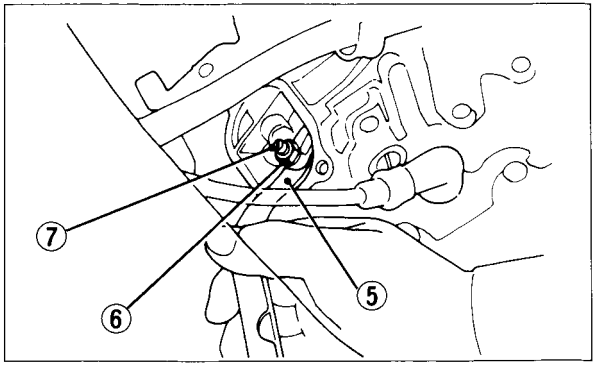

(5) Feeler gauge (7) Adjusting screw
(6) Lock nut

ENGINE OIL AND FILTER

Engine oil should be changed in accordance with the maintenance schedule. Use motor oils of the grade and viscosity recommended on page 25.

When changing oil, drain the oil from the crankcase while the engine is still warm. This will ensure complete and rapid draining.

CAUTION:

* *Used engine oil may cause skin cancer if repeatedly left in contact with the skin for prolonged periods. Although this is unlikely unless you handle used oil on a daily basis, it is still advisable to thoroughly wash your hands with soap and water as soon as possible after handling used oil.*

NOTE:

* Please dispose of used engine oil in a manner that is compatible with the environment. We suggest you take it in a sealed container to your local service station for reclamation. Do not throw it in the rubbish or pour it on the ground.

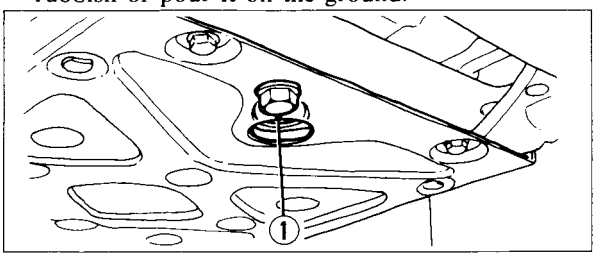

(1) Oil drain plug

1. With the BIG RED on level ground, remove the oil filler cap from the right crankcase cover.
2. Place an oil drain pan under the crankcase and remove the oil drain plug (1).
3. Remove the oil filter cover (2) by removing the screws. Let the remaining oil drain out. Discard the oil filter (3).
4. Check that the oil filter cover O-rings (4) are in good condition and then install the new oil filter with the rubber seal on oil filter facing out and install the cover using the bolts. Tighten the bolts securely.

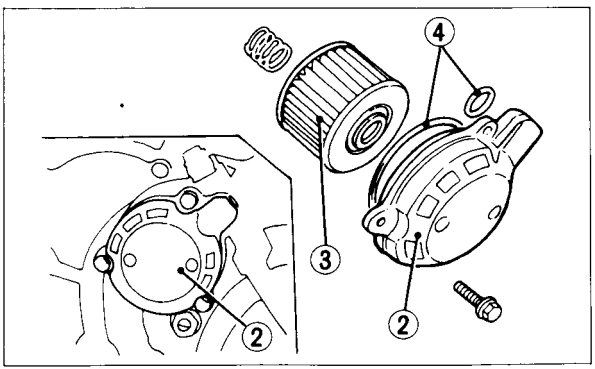

(2) Oil filter cover (4) O-rings
(3) Oil filter

5. Check that the drain plug sealing washer is in good condition and reinstall the oil drain plug securely, then fill the crankcase with approximately 2.1 liters (2.2 US qt) of the recommended oil.
6. Reinstall the oil filler cap.
7. Start the engine and let it idle for a few minutes.
8. Stop the engine and make sure that the oil level is between the upper and lower marks on the dipstick. If necessary, add more oil but do not overfill.

CAUTION:

* *Running the engine with improper oil level can cause serious engine damage.*

CARBURETOR CHOKE

Inspect the choke cable (1) for condition and choke lever (2) for operation. Replace the cable if it is damaged or kinked.

Lubricate the cable with commercially available cable lubricant to prevent premature wear and corrosion.

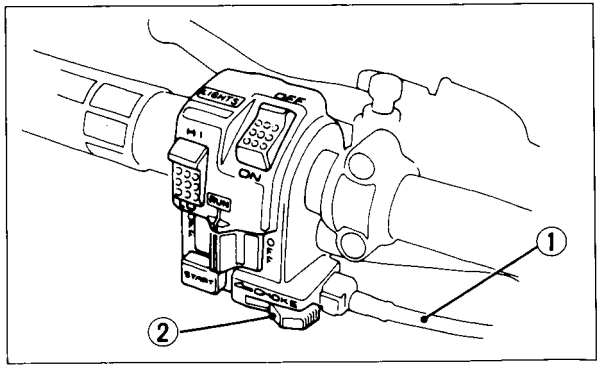

(1) Choke cable (2) Choke lever

CARBURETOR

The engine must be warm for accurate idle adjustment. Ten minutes of stop-and-go riding is sufficient.

NOTE:

* Do not attempt to compensate for faults in other systems by carburetor adjustment. See your authorized Honda dealer for regularly scheduled carburetor adjustments.

1. Warm up the engine.
2. Adjust idle speed with the throttle stop screw (1).
   IDLE SPEED: 1,500 ± 100 rpm
3. To adjust the fuel mixture, turn the pilot screw (2) clockwise until you hear the engine miss or decrease in speed, then counterclockwise until the engine again misses or decreases in speed. Center the pilot screw exactly between these two extreme positions. Usually the correct setting (between extremes of rich and lean) will be found at 1·3/4 turns open from a fully closed position.
   If idle speed changes after adjusting the fuel mixture, readjust the throttle stop screw.

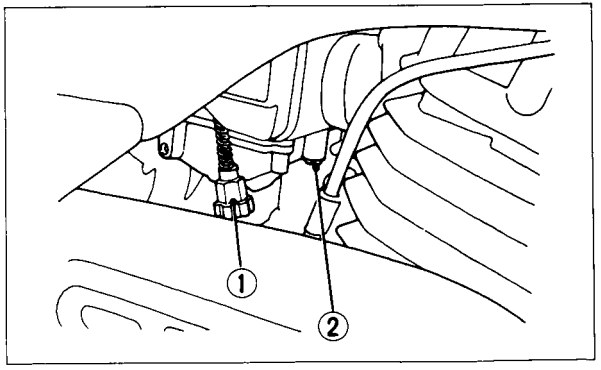

(1) Throttle stop screw (2) Pilot screw

HIGH ALTITUDE

When operating this BIG RED at high altitude, the air-fuel mixture becomes overly rich.
Between 3,000—8,000 feet (1,000—2,500 m) driveability and performance may be reduced and fuel consumption increased.

A high altitude jet is available to compensate for this high altitude richness. Although installation and adjustment procedures are offered here, we strongly urge that this carburetor modification be performed by your authorized Honda dealer, unless you are mechanically proficient and have the necessary tools.

CAUTION:

* *Sustained operation at lower altitudes below 5,000 feet (1,500 m) with the high altitude jet installed may cause engine overheating and damage.*

Altitude	Main jet	Pilot screw
Below 5,000 feet (1,500 m)	No. 120	Factory preset
Between 3,000-8,000 feet (1,000-2,500 m)	No. 115	Screw in 1/2 turn from factory preset

Adjustment: Between 3,000—8,000 feet (1,000—2,500 m)

1. Turn the fuel cock OFF.
2. Place the carburetor drain tube in a suitable container. Turn the carburetor drain screw counterclockwise and drain the carburetor.

⚠WARNING

* ***Petrol is extremely flammable and is explosive under certain conditions. Perform this operation in a well-ventilated area. Do not smoke or allow open flames or sparks in the area or where petrol is stored.***

3. Refer to the Official Honda Service Manual and remove the fuel tank.
4. Loosen the connecting and intake tube bands. Remove the carburetor.

CAUTION:

Do not let dirt and dust enter the engine through the intake port, or the engine may be damaged.

5. Remove the four screws (1) for the float chamber, then remove the float chamber (2).
6. Remove the standard main jet (3) and install the high altitude main jet.
7. Reinstall the float chamber and carburetor.
8. Secure the connecting and intake tube bands.
9. Install the removed parts in the reverse order of removal.
10. Make sure the drain screw is turned fully clockwise and turn the fuel cock ON.
11. Check to see if the throttle returns without hesitation and the throttle valve comes down to the lowest position without fail.

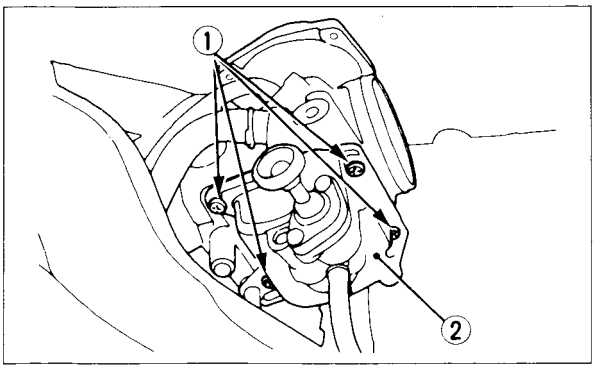

(1) Four screws (2) Float chamber

12. Make sure that the fuel tube and overflow tube are correctly routed as they were originally installed.
13. Start the engine. Adjust the idle speed (page 59).

NOTE:
* Adjust the idle speed at high altitude to ensure proper high altitude operation.

Adjustment: Below 5,000 ft (1,500 m)

1. Follow installation steps 1 through 5.
2. Reinstall the standard main jet.
3. Reinstall the carburetor and removed parts in the reverse order of removal.
4. Adjust the idle speed (page 59).

NOTE:
* Adjust the idle speed at low altitude to ensure proper low altitude operation.

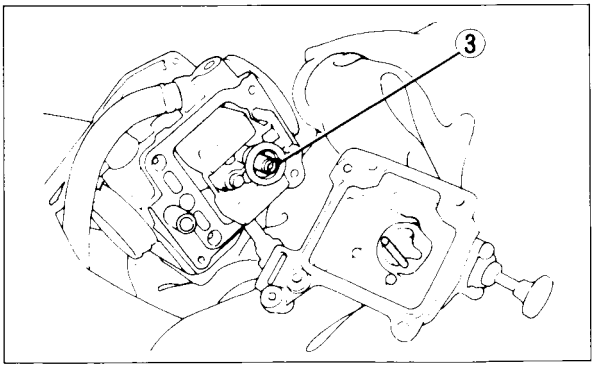

(3) Standard main jet

ENGINE FRONT GEAR CASE

Change the engine front gear case oil when specified by the MAINTENANCE SCHEDULE on page 47.

NOTE:

* Change the oil with the gear case warm, and the BIG RED on level ground to assure complete and rapid draining.

1. To drain the oil, remove the oil filler cap (1) and drain plug (2).

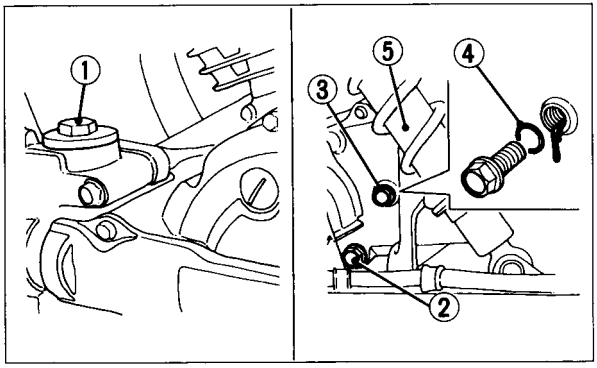

(1) Oil filler cap
(2) Oil drain plug
(3) Oil level check bolt
(4) O-ring
(5) Left front cushion

2. After the oil has completely drained, install the drain plug.
   Drain Plug Torque:
   12 N·m (1.2kg-m, 9 ft-lb)
3. Fill the gear case with the recommended oil.
   Recommended oil: SAE 10W—40
   Engine front gear case oil: 190 cc (6.4 US oz)
   Remove the oil level check bolt (3) and check that the gear case is filled up to the lower edge of the inspection hole with oil.
4. Check that the O-ring (4) is in good condition and install the oil level check bolt.
5. Install the oil filler cap.

FINAL DRIVE OIL

Change the final drive oil when specified by the MAINTENANCE SCHEDULE on page 47.

NOTE:

* Change the oil with the final drive warm, and the BIG RED on level ground to assure complete and rapid draining.

1. To drain the oil, remove the oil filler cap (1) and drain plug (2).

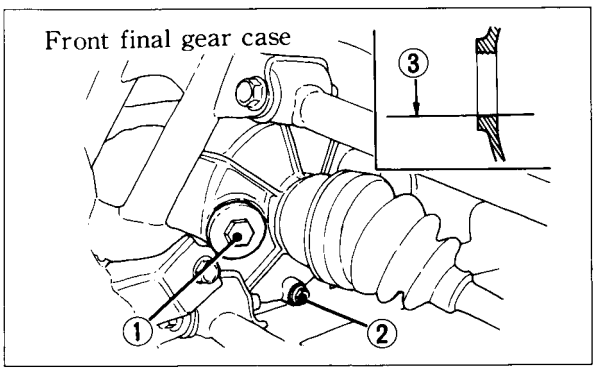

(1) Oil filler cap
(2) Oil drain plug

2. After the oil has completely drained, install the drain plug.
   Drain Plug Torque:
   12 N·m (1.2 kg-m, 9 ft-lb)
3. Fill the gear case with the recommended oil.
   Recommended oil: HYPOID GEAR OIL SAE 80
   Front final gear case oil: 190 cc (6.4 US oz)
   Rear final gear case oil: 90 cc (3.0 US oz)
   Make sure the recommended oil is filled up to the lower edge of the inspection hole (3).
4. Install the oil filler cap.

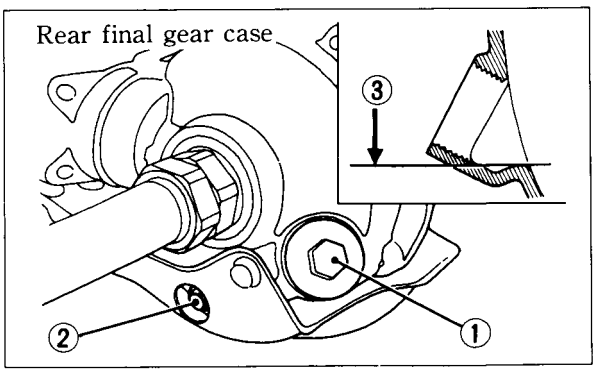

(3) Lower edge of inspection hole

BRAKES

Front Brake Lever

This BIG RED has hydraulic front drum brakes. Fluid level and shoe lining wear must be inspected periodically. The system must be inspected frequently to ensure there are no fluid leaks.

1. Measure the distance the brake lever moves before the brake starts to take hold.
   Free play, measured at the tip of the front brake lever (1), should be within 25—30 mm (1—1-1/4 in).

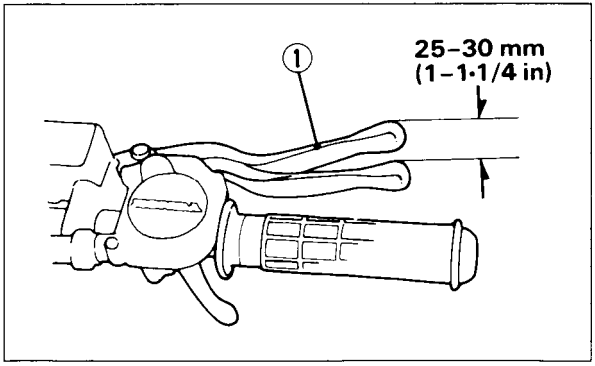

(1) Front brake lever

2. Remove the inspection hole plug (2) and inspect the lining thickness (3).
   Lining Thickness:
   Standard: 4.0 mm (0.16 in)
   Service Limit: 1.0 mm (0.04 in)

NOTE:

* If either lining is worn beyond the limit, both brake shoes must be replaced.

3. If the brake lever free play is excessive and the brake linings are not worn beyond the recommended limit, adjust the brake shoe lining-to-drum clearance (page 65).
4. Reinstall the inspection hole plug (2), seating it into the inspection hole as shown.

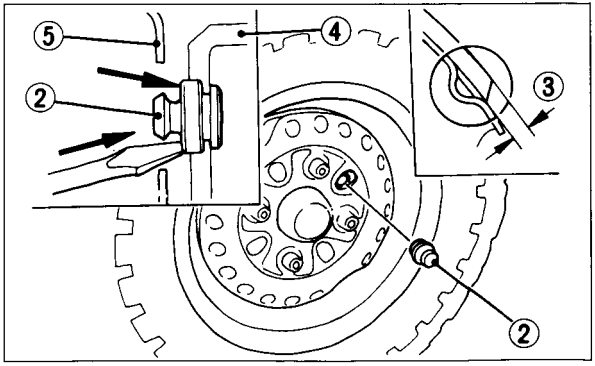

(2) Inspection hole plug (4) Front brake drum
(3) Lining thickness (5) Front wheel rim

5. Recheck the brake lever free play. If free play is still excessive after adjusting the brake lining clearance, there is probably air in the brake system and it must be bled out. See your authorized Honda dealer for this service.

Adjustment:

1. Pump the brake lever two or three times firmly and release it.
2. Raise the front and rear wheels off the ground by placing a support block under the vehicle.
3. Remove the inspection hole plug (2).
4. Turn the brake shoe adjuster (5) up with a screwdriver until the front brake locks.

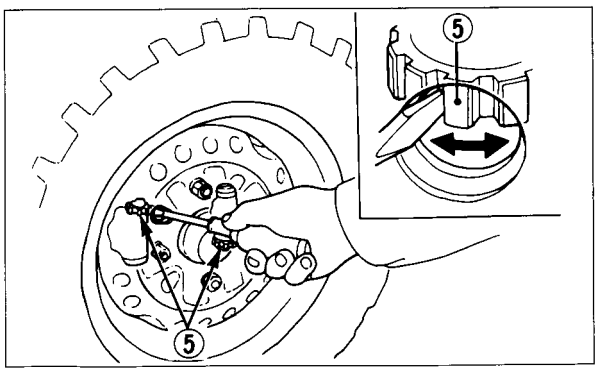

(5) Adjusters

5. Back the adjuster off three clicks and pump the brake lever several times. Turn the wheel manually and make sure the brake does not drag.
6. Turn the wheel and follow steps 3 through 5 on the other adjuster.
7. Reinstall the inspection hole plug (2), seating it into the inspection hole as shown.
8. Adjust the other front brake.

Brake Fluid Level:

⚠ WARNING

* ***Brake fluid may cause irritation. Avoid contact with skin or eyes. In case of contact, flush thoroughly with water and call a doctor if your eyes were exposed.***

CAUTION:

* *When adding brake fluid, be sure the reservoir is horizontal before the cover is removed or brake fluid may spill out.*
* *Use only DOT 3 or 4 brake fluid from a sealed container.*
* *Handle brake fluid with care because it can damage paint and instrument lenses.*
* *Never allow contaminants (dirt, water, etc.) to enter the brake fluid reservoir.*

Brake fluid must be added to the reservoir whenever the fluid level begins to reach the lower level mark (1).

1. Remove the screws (2), reservoir cap (3), diaphragm plate (4) and diaphragm (6).
2. Fill the reservoir with DOT 3 or DOT 4 BRAKE FLUID from a sealed container up to the upper level mark (6).
3. Reinstall the removed parts in the reverse order of removal.

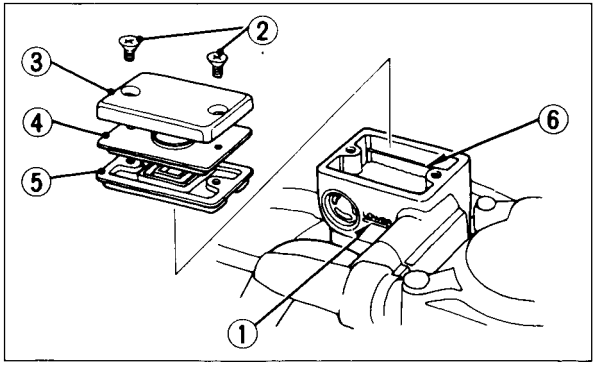

(1) Lower level mark
(2) Screws
(3) Reservoir cap
(4) Diaphragm plate
(5) Diaphragm
(6) Upper level mark

Other Checks:

Make sure there are no fluid leaks. Check for deterioration or cracks in the hose and fittings.

Rear Brake Pedal

Measure the distance the rear brake pedal moves before the brake starts to take hold.
Free play, measured at the end of the pedal (1), should be 15—20 mm (5/8—3/4 in).
Adjust by turning the brake pedal adjusting nut (2) located on the brake operating rod at the rear of the frame.

NOTE:

* Make sure the cut-out on the adjusting nut is seated on the brake arm pin.

Other Checks:

Check the brake cable for kinks or signs of wear that could cause sticking or failure. Lubricate the brake cable with a commercially available cable lubricant to prevent premature wear and corrosion.
Make sure the brake arm, spring, and fasteners are in good condition.

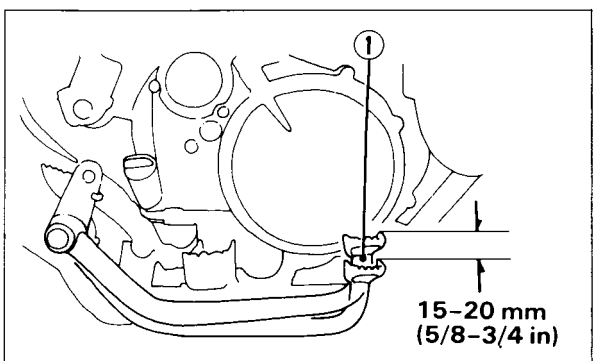

(1) Rear brake pedal

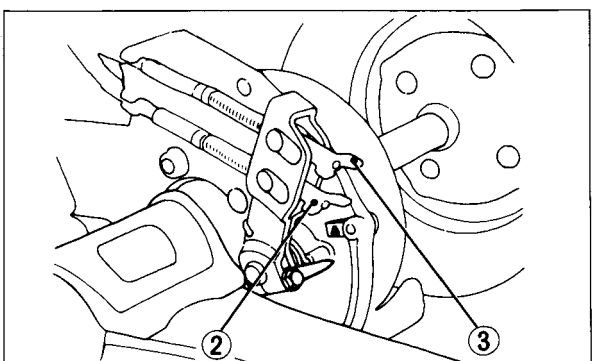

(2) Brake pedal adjusting nut
(3) Brake lever adjusting nut

Rear Brake Lever/Parking Brake

Measure the distance the rear brake lever moves before the brake starts to take hold.

Free play, measured at the tip of the brake lever (1), should be within 15—20 mm (5/8—3/4 in). Minor adjustments can be made with the upper adjuster (2) on the front brake lever. Loosen the lock nut (3) and turn the upper adjuster (2). Major adjustments should be made using the lower adjuster (4) located on the brake arm (5).

Wear Indicator:

When the brake is applied, an arrow (6) attached to the brake arm (5) moves toward a reference mark (7) on the brake panel.

If the arrow aligns with the reference mark on full application of the brake, the brake shoes must be replaced. See your authorized Honda dealer for this service.

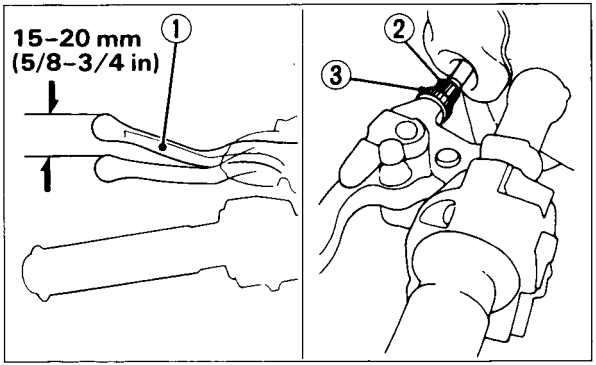

(1) Brake lever
(2) Upper adjuster
(3) Lock nut

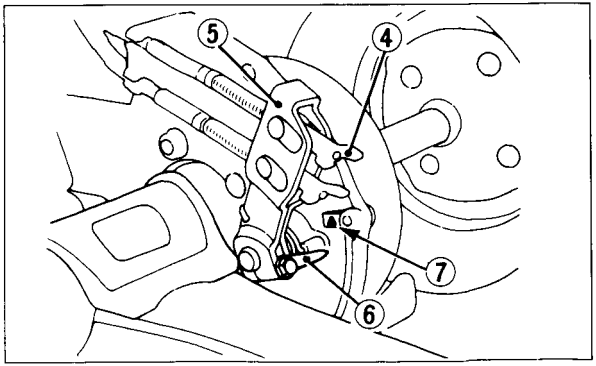

(4) Lower adjuster
(5) Brake arm
(6) Arrow
(7) Reference mark

Other Checks:

Check the brake cable for kinks or signs of wear that could cause sticking or failure. Lubricate the brake cable with a commercially available cable lubricant to prevent wear and corrosion. Make sure the brake arm, spring, and fasteners are in good condition.

CLUTCH

1. Make sure the ignition switch is OFF.
2. Loosen the lock nut (1), and turn the clutch adjuster (2) counterclockwise until you feel slight resistance. Then turn the adjuster 1/4 turn clockwise, and tighten the lock nut to hold the adjuster in this position.
3. After adjustment, start the engine and test ride the BIG RED to be certain that the clutch is operating properly.

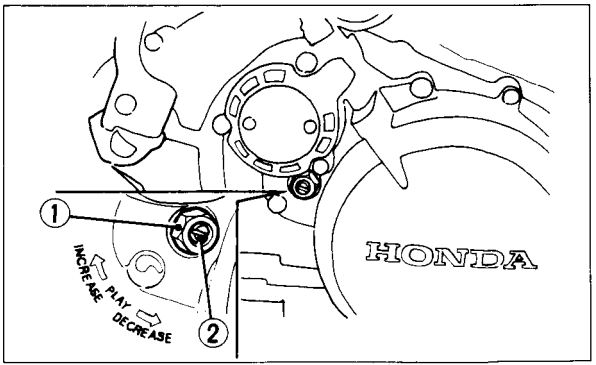

(1) Lock nut (2) Clutch adjuster

REVERSE ENGAGEMENT LEVER

Measure the reverse engagement lever free play.
Free play, measured at the lever end near the cable, should be within 2—4 mm (1/16—1/8 in).
To adjust, loosen the lock nut (1) and turn the adjusting nut (2). Tighten the lock nut securely.

Other Checks:
Check the reverse engagement cable and lever for loose connections, or other damage.

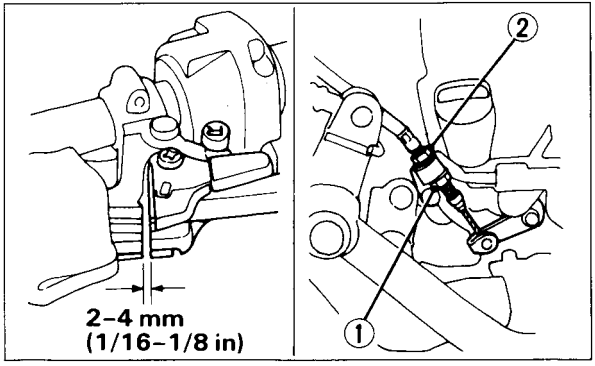

(1) Lock nut
(2) Adjusting nut

ENGINE GUARD AND SKID PLATES

The engine guard (1) protects the engine. The skid plates (2) protect the drive components and rear brake. Check the guard and plates for cracks, damage or looseness at intervals shown in the Maintenance Schedule (page 48).
Replace the guard and plates with new ones if they are cracked or damaged.
If the guard and plate bolts are loose, tighten them securely.

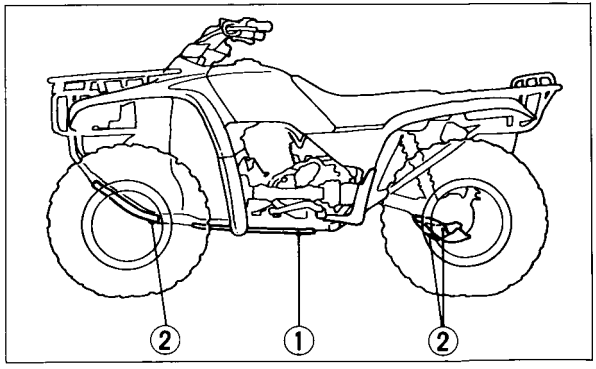

(1) Engine guard (2) Skid plates

DRIVESHAFT BOOTS

Check the rubber driveshaft boots (1) for damage or leaking grease. If necessary, have your authorized Honda dealer replace them.

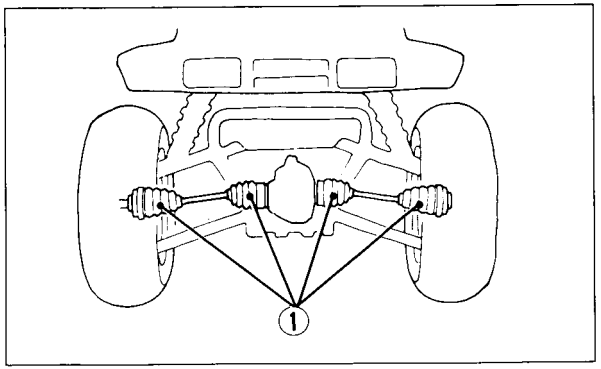

(1) Driveshaft boots

Storage

Extended storage, such as for winter, requires that you take certain steps to reduce the effects of deterioration from non-use of the BIG RED. In addition, necessary repairs should be made BEFORE storing the BIG RED; otherwise, these repairs may be forgotten by the time the BIG RED is removed from storage.

1. Change the engine oil and oil filter.
2. Drain the fuel tank and carburetor. Spray the inside of the tank with an aerosol rust-inhibiting oil. Reinstall the fuel cap on the tank.

NOTE:

* If storage will last more than one month, carburetor draining is very important, to assure proper performance after storage.

⚠WARNING

* ***Petrol is extremely flammable and is explosive under certain conditions. Perform this operation in a well-ventilated area with the engine stopped. Do not smoke or allow open flames or sparks in the area or where petrol is stored.***

3. Remove the spark plug and pour a tablespoon (15—20 cc) of clean engine oil into the cylinder. Operate the starter for a few seconds to distribute the oil, then reinstall the spark plug.

NOTE:

* When turning the engine over, the engine stop switch should be OFF and the spark plug placed in its cable cap and grounded to prevent damage to the ignition system.

4. Remove the battery. Store it in an area protected from freezing temperatures and direct sunlight. Slow charge the battery once a month.

⚠WARNING

* ***Even though the battery is sealed, it still vents explosive gases. Do not store in areas near sparks or open flames.***

5. Wash and dry the BIG RED. Wax all painted surfaces.

6. Inflate the tyres to their recommended pressures. Place the BIG RED on blocks to raise all tyres off the ground.
7. Cover the BIG RED (don't use plastic or other coated materials) and store in an unheated area, free of dampness with a minimum of daily temperature variation. Do not store the BIG RED in direct sunlight.

Removal from Storage

1. Uncover and clean the BIG RED. Change the engine oil if more than 4 months have passed since the start of storage.
2. Check the voltage and slow charge the battery if it is below 12.8 V. Install the battery.
3. Drain any excess aerosol rust-inhibiting oil from the fuel tank. Fill the fuel tank with fresh petrol.
4. Perform all Pre-ride Inspection checks (page 29). Test ride the BIG RED at low speeds in a safe riding area.

1. Turn the fuel cap vent lever and fuel cock OFF.
2. Place the carburetor drain tube in a suitable container.
3. Turn the drain screw counterclockwise to drain the petrol from the carburetor.

⚠ WARNING

* ***Petrol is extremely flammable and is explosive under certain conditions. Perform this operation in a well-ventilated area with the engine stopped. Do not smoke or allow open flames or sparks in the area or where petrol is stored.***
* ***Never incline the machine without draining the fuel and removing the battery. Fuel vapor or spilled fuel may ignite and the battery may leak electrolyte.***

4. After draining, turn the drain screw clockwise until tight.

NOTE:

* Be sure the fuel drain is closed (screw turned clockwise) before refueling the BIG RED.
* If the BIG RED is transported on its side, engine oil may leak out.

5. Remove the battery, disconnecting the negative (−) terminal first, then the positive (+) terminal.
   When reinstalling the battery, connect the positive (+) terminal first, then the negative (−).
6. If wheel removal is required when transporting, follow the procedures on the following pages.
7. Always check tyre pressures just before riding.

Front Wheel Removal

1. Place a support block under the vehicle and raise the front wheels off the ground.
2. Loosen the wheel nuts (1) with the 17 mm socket wrench.
3. Remove the wheel.

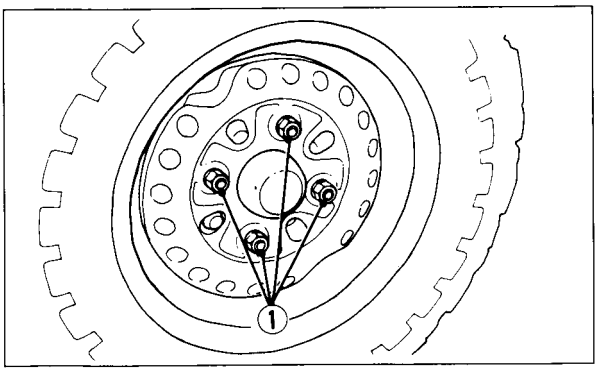

(1) Wheel nuts

Installation:

Reinstall the front wheels and tighten the wheel nuts (1) in a crisscross pattern to 65 N · m (6.5 kg-m, 47 ft-lb).

⚠ WARNING

* ***Install the wheel nuts with their tapers on the inside as shown. Improper assembly may cause the wheel to come loose.***
* ***If a torque wrench was not used for installation, see your authorized Honda dealer as soon as possible to verify proper assembly.***

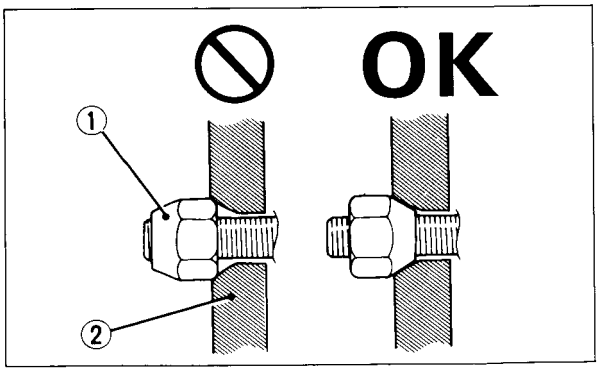

(1) Wheel nut (2) Wheel rim

Rear Wheel Removal

1. Place a support block under the vehicle and raise the rear wheels off the ground.
2. Loosen the wheel nuts (1) with the 17 mm socket wrench.
3. Remove the wheel.

Installation:

Reinstall the rear wheel and tighten the wheel nuts (1) in a crisscross pattern to 65 N·m (6.5 kg-m, 47 ft-lb).

⚠ WARNING

* ***Install the wheel nuts with their tapers on the inside as shown. Improper assembly may cause the wheel to come loose.***
* ***If a torque wrench was not used for installation, see your authorized Honda dealer as soon as possible to verify proper assembly.***

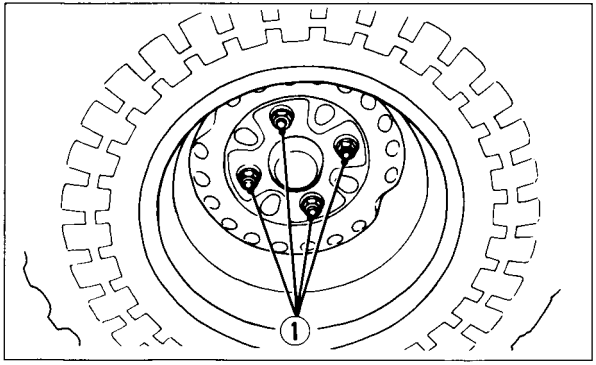

(1) Wheel nuts

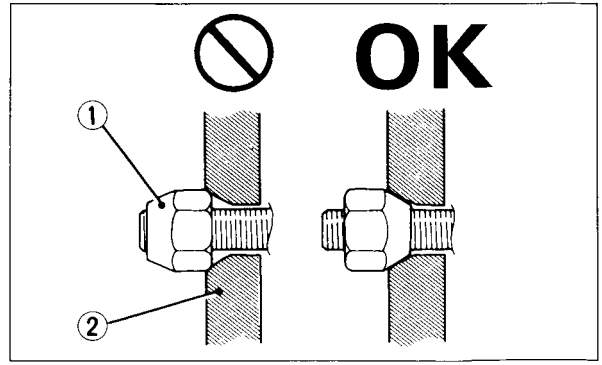

(1) Wheel nut (2) Wheel rim

SPECIFICATIONS

DIMENSIONS	
Overall length	1,875 mm (73.8 in)
Overall width	1,065 mm (41.9 in)
Overall height	1,100 mm (43.3 in)
Wheelbase	1,235 mm (48.6 in)
WEIGHT	
Dry weight	215 kg (474 lbs)
CAPACITIES	
Engine oil	2.5 ℓ (2.6 US qt)
Fuel tank	12.5 ℓ (3.3 US gal)
Fuel reserve capacity	2.5 ℓ (0.7 US gal)
Passenger capacity	Operator only
ENGINE	
Bore and stroke	74.0 x 65.5 mm (2.9 x 2.6 in)
Compression ratio	9.0 : 1
Displacement	281.7 cc (17.2 cu-in)
Spark plug gap	0.8-0.9mm (0.031-0.035 in)
Valve clearance	0.15 mm (0.006 in)

CHASSIS AND SUSPENSION	
Caster angle	2°
Trail length	10 mm (0.39 in)
Tire size, Front:	AT 23 x 8-11 ★★
Rear:	AT 24 x 9-11 ★
POWER TRANSMISSION	
Primary reduction	2.407
Final reduction Front:	5.554
Rear:	5.684
Gear ratio, SL	4.083
1st	2.389
2nd	1.609
3rd	1.179
4th	0.848
Reverse gear ratio	5.397

Noise level	82.0 dB (A) tested to comply with ISO 5131.

WIRING DIAGRAM

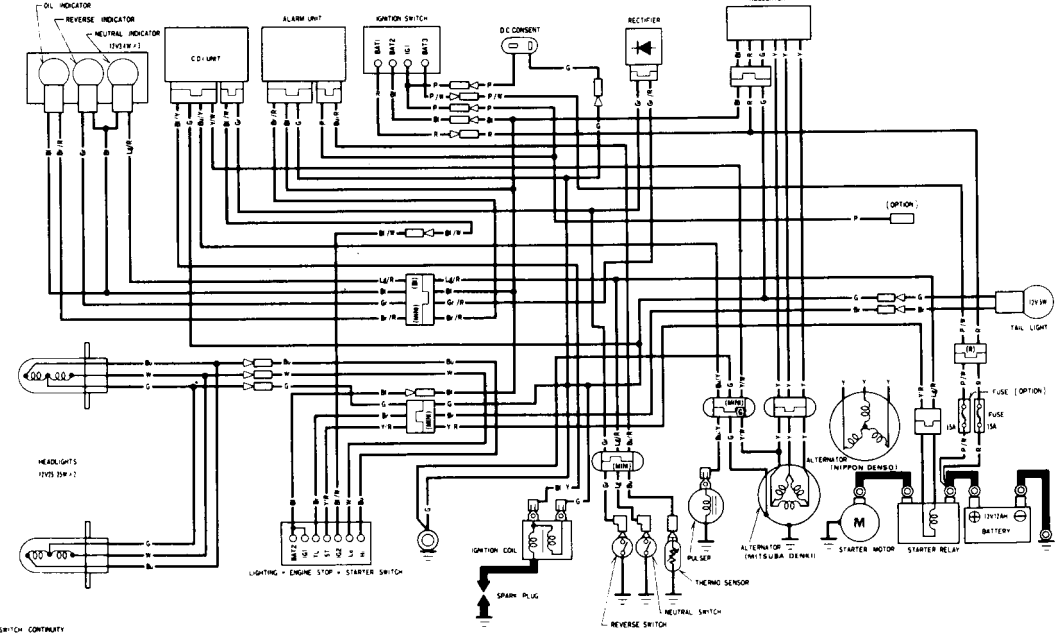

SWITCH CONTINUITY

IGNITION SWITCH

	BAT1	BAT2	BAT3	IG1
OFF				
ON	○	○	○	○
COLOR	R	Br	P/W	P

LIGHTING SWITCH

	BAT2	TL	(HL)
OFF			
ON	○	○	○
COLOR	Br	Br	

DIMMER SWITCH

	H	(HL)	Lo
Hi	○	○	
⬍			
Lo		○	○
COLOR	Bu		W

ENGINE STOP SWITCH

	IG1	IG2
OFF		
RUN	○	○
OFF		
COLOR		Br/W

STARTER SWITCH

	BAT2	ST
FREE		
PUSH	○	○
COLOR	Br	Y/R

Br	BLACK	Br	BROWN
Y	YELLOW	O	ORANGE
Bu	BLUE	Lb	LIGHT BLUE
G	GREEN	Lg	LIGHT GREEN
R	RED	P	PINK
W	WHITE	Gr	GRAY

0030Z-HC4-7700

HONDA MOTOR CO., LTD.

32HC5811
00X32-HC5-8110

英 Ⓝ 5008808 K
PRINTED IN JAPAN